Transportation and installation manual GB/en

Air handling unit

X-CUBE compact

including X-CUBE compact accessories

Read the instructions prior to performing any task!

TROX® TECHNIK
The art of handling air

TROX GmbH
Heinrich-Trox-Platz
47504 Neukirchen-Vluyn
Germany
Telephone: +49 2845 202-0
Fax: +49 2845 202-265
E-mail: trox@trox.de
Internet: www.troxtechnik.com

A00000052582, 1, GB/en
01/2016

© TROX GmbH 2015

Information on the transportation and installation manual

This transportation and installation manual enables operating or service personnel to use the X-CUBE compact air handling unit (AHU) safely and efficiently.

The transport and installation manual must be kept in the vicinity of the unit and must be accessible at all times.

This transport and installation manual is intended for use by fitting and installation companies, operators, in-house technicians, technical staff or properly trained persons, and skilled qualified electricians or air conditioning technicians.

It is essential that these individuals read and fully understand this transport and installation manual before starting any work. The basic prerequisite for safe working is to comply with the safety notes and all instructions in this transportation and installation manual.

The local regulations for health and safety at work and the general safety regulations for the area of application of the air handling unit also apply.

Illustrations in this transport and installation manual are mainly for information and may vary from the actual design of the air handling unit.

Copyright

This document, including all illustrations, is protected by copyright and pertains only to the corresponding unit.

Any use without our consent may be an infringement of copyright, and the violator will be held liable for any damage.

This applies in particular to:

- Publishing content
- Copying content
- Translating content
- Microcopying content
- Saving content to electronic systems and editing it

TROX Technical Service

To ensure that a fault is processed as quickly as possible, please keep the following information ready:

- Delivery date of the TROX components and systems
- TROX order number
- Product name
- Brief description of the fault

Contact in case of a fault

Online	*www.troxtechnik.com*
Phone	+49 2845 202-400

Limitation of liability

The information in this manual has been compiled with reference to the applicable standards and guidelines, the state of the art, and our expertise and experience of many years.

The manufacturer does not accept any liability for damages resulting from:

- Non-compliance with this manual
- Incorrect use
- Operation or handling by untrained individuals
- Unauthorised modifications
- Technical changes
- Use of non-approved replacement parts

The actual scope of delivery may differ from the information in this manual for bespoke constructions, additional order options or as a result of recent technical changes.

The obligations agreed in the order, the general terms and conditions, the manufacturer's terms of delivery, and the legal regulations in effect at the time the contract is signed shall apply.

We reserve the right to make technical changes.

Defects liability

For details regarding defects liability please refer to Section VI, Warranty Claims, of the Delivery and Payment Terms of TROX GmbH.

The Delivery and Payment Terms of TROX GmbH are available at *www.troxtechnik.com*.

Other applicable documentation

In addition to these instructions, the following documents apply:

- Order confirmation
- Air handling unit data sheet from TROX GmbH
- Product drawings

- Data sheets for the supplier components, if applicable
- Circuit diagram for the air handling unit
- Additional drawings, if applicable
- Operating manual for X-CUBE compact
- Installation and commissioning manual for the X-CUBE compact accessories

Safety notes

Symbols are used in this manual to alert readers to areas of potential hazard. Signal words express the degree of the hazard.

DANGER!
Imminently hazardous situation which, if not avoided, will result in death or serious injury.

WARNING!
Potentially hazardous situation which, if not avoided, could result in death or serious injury.

CAUTION!
Potentially hazardous situation which, if not avoided, may result in minor or moderate injury.

NOTICE!
Potentially hazardous situation which, if not avoided, may result in property damage.

ENVIRONMENT!
Environmental pollution hazard.

Tips and recommendations

Useful tips and recommendations as well as information for efficient and fault-free operation.

Safety notes as part of instructions

Safety notes may refer to individual instructions. In this case, safety notes will be included in the instructions and hence facilitate following the instructions. The above listed signal words will be used.

Example:

1. ▸ Untighten the screw.
2. ▸

   CAUTION!
   Danger of finger entrapment when closing the lid.

   Be careful when closing the lid.
3. ▸ Tighten the screw.

Specific safety notes

The following symbols are used in safety notes to alert you to specific hazards:

Warning signs	Type of danger
	Warning – hand injuries.
	Warning - danger of falling.
	Warning – danger zone.

1 Overview ... **6**

2 Safety ... **8**

2.1 System owner's responsibility ... 8
2.2 Personnel requirements ... 8
2.3 Personal protective equipment ... 9

3 Transport and storage ... **10**

3.1 Delivering the air handling unit ... 10
3.1.1 Type of delivery ... 10
3.1.2 Symbols on the packaging ... 10
3.2 Delivery check ... 10
3.3 Transporting packages ... 11
3.3.1 Safety notes for transport ... 11
3.3.2 Transporting packages by forklift or pallet truck ... 12
3.3.3 Transporting packages by crane ... 12
3.4 Storing packages ... 15
3.5 Unpacking packages ... 15

4 Installation and assembly ... **16**

4.1 Safety notes on installation and assembly ... 16
4.2 Requirements for the installation location ... 16
4.2.1 Requirements for indoor installation ... 16
4.2.2 Requirements for outdoor installation ... 17
4.3 Insulating the air handling unit from vibrations ... 18
4.4 Setting up and assembling air handling unit/AHU components ... 18
4.4.1 Setting up air handling unit/AHU components ... 18
4.4.2 Before installation ... 19
4.4.3 Assembling AHU components ... 20
4.4.4 Installing accessories ... 23

5 Installation ... **25**

5.1 Safety notes on installation ... 25
5.2 Before installation ... 25
5.3 Changing operating side ... 26
5.4 Connecting siphon to air handling unit ... 27
5.5 Connecting the heater/cooler ... 28
5.6 Connecting the air handling unit to power supply ... 29
5.7 Connecting the air handling unit to the building ... 30
5.8 Connecting I&C to on-site PC or on-site network ... 30

6 Initial commissioning ... **31**

6.1 Safety notes for the initial commissioning ... 31
6.2 Before initial commissioning ... 31
6.3 Installing AHU components ... 32
6.3.1 Filter unit ... 32
6.3.2 Heater/cooler ... 32
6.3.3 Multileaf dampers ... 33
6.3.4 Rotary heat exchanger ... 34
6.3.5 Droplet eliminator ... 35
6.3.6 Plate heat exchanger ... 36
6.3.7 Setting up accessories ... 36
6.4 Switching on the air handling unit ... 36
6.4.1 Before switching on ... 36
6.4.2 Switching on ... 36
6.5 Configuring the air handling unit ... 37
6.5.1 Setting up X-CUBE controller communication ... 37
6.5.2 Setting up network communication ... 38
6.6 Logging in to the web server ... 39

7 Removal and disposal ... **40**

7.1 Safety notes on removal and disposal ... 40
7.2 Removal ... 41
7.3 Disposal ... 41

8 FAQ ... **42**

9 Index ... **45**

Appendix ... **47**

A Aligning storage mass ... 49
B Motor drive for rotary heat exchanger ... 55
C Anti-frost heating for siphons ... 61
D Circuit diagram tray 230 V AC-PHE ... 64
E Circuit diagram tray 230 V AC-RHE ... 78
F Circuit diagram tray 400 V AC-PHE ... 92
G Circuit diagram tray 400 V AC-RHE ... 106
H Accessories for X-CUBE compact ... 120

1 Overview

Overview with rotary heat exchanger

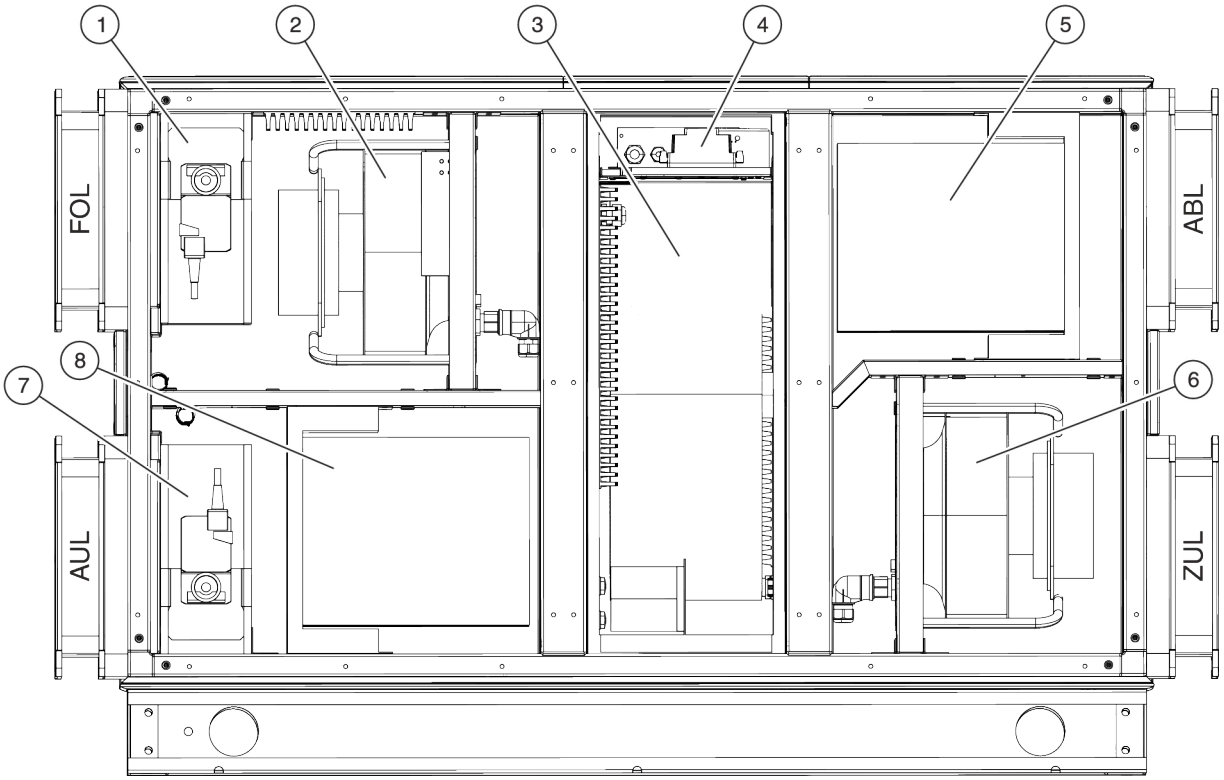

Fig. 1: Overview with rotary heat exchanger

1	Multileaf dampers	7	Multileaf dampers
2	Centrifugal fan	8	Filter unit
3	Rotary heat exchanger	FOL	Exhaust air (EHA)
4	Instrumentation and control systems (I&C)	ABL	Extract air (ETA)
5	Filter unit	ZUL	Supply air (SUP)
6	Centrifugal fan	AUL	Fresh air (ODA)

Overview with plate heat exchanger

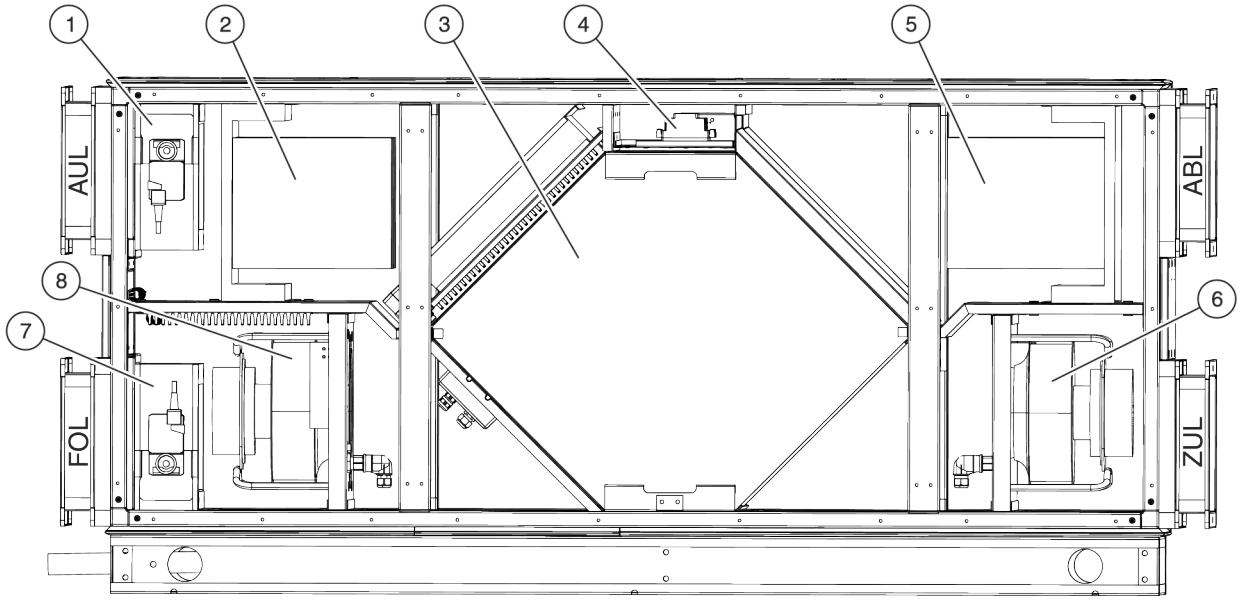

Fig. 2: Overview with plate heat exchanger

1	Multileaf dampers	7	Multileaf dampers
2	Filter unit	8	Centrifugal fan
3	Plate heat exchanger	AUL	Fresh air (ODA)
4	Instrumentation and control systems (I&C)	ABL	Extract air (ETA)
5	Filter unit	ZUL	Supply air (SUP)
6	Centrifugal fan	FOL	Exhaust air (EHA)

Each X-CUBE compact air handling unit consists of several components. The table below (*'AHU components' on page 7*) contains the AHU components that can make up the air handling unit. The components and quantities actually used for the air handling unit are listed in the order-specific X-CUBE compact operating manual.

AHU components

Symbol	Designation	Symbol	Designation
	Heating coil		Multileaf dampers (Fig. 1/1+7) (Fig. 2/1+7)
	Cooling coil		Centrifugal fan (Fig. 1/2+6) (Fig. 2/6+8)
	Filter unit (Fig. 1/5+8) (Fig. 2/2+5)		Plate heat exchanger (Fig. 2/3)
	Rotary heat exchanger (Fig. 1/3)		Roof for outdoor installation
	Instrumentation and control systems (I&C) (Fig. 1/4) (Fig. 2/4)		

2 Safety

2.1 System owner's responsibility

Operator

The operator is the person who actually operates the air handling unit for commercial or business purposes or who allows third parties to use/operate the unit, and who bears legal product stewardship for the protection of the user, personnel, or third parties during operation.

Operator's obligations

The unit is intended for commercial use. The operator of the device is therefore subject to the legal obligations of occupational health and safety regulations.

In addition to the safety notes in this manual, the applicable safety, accident prevention, and environmental regulations for the area of application of the unit must be observed.

In particular:

- The operator must properly integrate the air handling unit into the on-site fire protection concept.
- The operator must properly integrate the air handling unit into the on-site lightning protection concept.
- The operator must clearly define and regulate the responsibilities for the transportation, storage, assembly, installation, commissioning, transfer, and removal of the unit.
- The operator must commission a skilled qualified electrician to create equipotential bonding.
- The operator must ensure that all employees who work with the air handling unit have read and understood this manual.
- The operator must provide the employees with the required personal protective equipment.
- The operator must have all safety equipment tested regularly to ensure that it is functional and complete.
- The operator must comply with the country-specific legal provisions.
- The operator must have technical and hygiene tests carried out and documented before commissioning the air handling unit for the first time. The tests are repeated at regular intervals.

2.2 Personnel requirements

⚠ WARNING!

Danger if individuals are insufficiently qualified!

Insufficiently qualified individuals are unable to assess the risks involved in working with the air handling unit and are in danger of causing severe or fatal injuries to themselves or those around them.

– Work must only be carried out by specifically qualified personnel.
– Insufficiently qualified personnel must be kept out of the working area.

Crane driver
Crane drivers are physically and mentally able to operate a crane on their own.

Crane drivers have been instructed on how to operate a crane and have proven this skillset to the operator.

Crane drivers have been commissioned by the operator to operate cranes. Crane drivers are commissioned in writing if the crane is non-stationary.

Crane drivers are at least 18 years old.

Forklift drivers
Forklift drivers have acquired the skills required to operate driver-operated forklift trucks and have been commissioned in writing by the operator on this basis to operate one.

HVAC technician
HVAC technicians are individuals who have sufficient professional or technical training in the field they are working in to enable them to carry out their assigned duties at the level of responsibility allocated to them and in compliance with the relevant guidelines, safety regulations and instructions. HVAC technicians are individuals who have in-depth knowledge and skills related to HVAC systems; they are also responsible for the professional completion of the work under consideration.

HVAC technicians are individuals who have sufficient professional or technical training, knowledge and actual experience to enable them to work on HVAC systems, understand any potential hazards related to the work under consideration, and recognise and avoid any risks involved.

Skilled qualified electrician
Skilled qualified electricians are individuals who have sufficient professional or technical training, knowledge and actual experience to enable them to work on electrical systems, understand any potential hazards related to the work under consideration, and recognise and avoid any risks involved.

2.3 Personal protective equipment

Hearing protection

Hearing protection protects against hearing damage resulting from noise exposure.

Industrial safety helmet

Industrial safety helmets protect the head against falling objects, swinging loads, and impacts with stationary objects.

Protective clothing

Protective clothing is close fitting, with low tear resistance, close fitting sleeves, and no projecting parts. It prevents entanglement in moving machinery.

Do not wear jewellery.

Protective gloves

Protective gloves are used to protect hands from friction, abrasions, punctures, or deeper injuries.

Safety harness

The safety harness protects personnel from falling when there is an increased risk of falling. The risk of falling is increased when certain height differences are exceeded and the workspace is not secured by a railing.

The safety harness must be worn in such a way that the safety rope is connected to the safety harness and to a secure attachment point; provide shock absorbers if necessary.

Safety harnesses must only be used by personnel who have been specifically trained to use them.

Safety shoes

Safety shoes protect the feet against crushing, falling parts, and slipping on slippery ground.

3 Transport and storage

3.1 Delivering the air handling unit

3.1.1 Type of delivery

Immediately after arrival, check delivered air handling units for transport damage and completeness,
↳ *Chapter 3.2 'Delivery check' on page 10*.

Depending on its size, the air handling unit is delivered either fully assembled or as individual components screwed onto square timber frames or disposable pallets according to the load distribution. The load distribution is shown on the unit drawing.

To protect the components from colliding with transport slings, some components attached on the outside are supplied unassembled. Components attached on the outside must be fitted individually on site and sealed to protect against leaks.

3.1.2 Symbols on the packaging

The following symbol is displayed on the packaging. This symbol must always be followed during transport.

Additional symbols, notes, and information documents may also be displayed on the packaging. These must also be followed.

Lashing point

Fig. 3: Lashing point

The lashing point on the means of transport must be attached centrally to the packaging unit.

3.2 Delivery check

Sharp edges, sharp corners and thin sheet metal parts

CAUTION!

Danger of injury at sharp edges, sharp corners and thin sheet metal parts!

Sharp edges, sharp corners and thin sheet metal parts of the plate and rotary heat exchangers or of the cooling or heating coil may cause cuts or grazes.

– Be careful when working on these components.
– Wear protective gloves, safety shoes and a hard hat.

Upon receipt, immediately check delivered items for completeness and transport damage. In case of any damage or an incomplete shipment, contact the shipping company and your supplier immediately. Note missing parts and damage on the waybill and have it confirmed by the driver.

If the process is not followed, no liability for damage will be accepted.

See the notes on shipping damage on the packaging or in the shipping papers.

Damage claims cannot be processed unless the following actions are carried out. In both cases below, contact TROX before installing the AHU components.

External damage to packaging.

- Unpack the goods in the presence of the shipping agent and have the damage certified on the shipping contract.
- Photograph the damage.
- Report the damage to TROX immediately.

No external damage to packaging, contents damaged.

- Photograph the damage.
- Report the damage to TROX immediately in writing.
- Note that shipping damage must be reported within four days of delivery.

3.3 Transporting packages

3.3.1 Safety notes for transport

Improper transport

⚠ WARNING!

Danger of death if transported improperly!

Danger of death if packages are lifted without the designated transport equipment and fastenings or if they fall during transportation.

- Transport packages in operating position only
- Never stop under suspended loads
- Never transport additional loads with the package
- Only use the proper attachment points
- Never directly or indirectly load supply or outlet connections
- Only use suitable and approved hoisting devices and lifting gear with sufficient load-bearing capacity
- Never knot ropes and chains or place them on sharp edges
- Only load transport equipment vertically
- Ensure that the ropes, belts, and chains do not twist
- Only lift packages using correctly assembled and mechanically secured transport equipment and fastenings
- Fix and secure all doors, dampers, and panels
- Carefully transport the packages without any jerky movements and lower them when leaving the workplace
- Transport slings are designed for single use only and not for permanent unit attachment
- Transport tubes are designed for single use only and not for permanent unit attachment

Eccentric centre of gravity

⚠ WARNING!

Falling or tilting packages may cause injury!

Packages may have an eccentric centre of gravity. If they are incorrectly attached, packages may tilt and fall. Falling or tilting packages can cause serious injuries.

- Note the markings and information on the packages concerning the centre of gravity
- When transporting packages by crane, attach the crane hook so that it is located above the centre of gravity of the packages
- Lift the packages carefully and watch whether they tilt If required, change attachment

Indicating the centre of gravity on the packaging

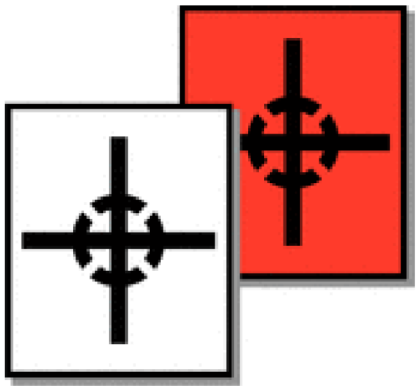

Fig. 4: Shipping labels

Shipping labels are attached to the packaging to indicate the centre of gravity (Fig. 4).

Sharp edges, sharp corners and thin sheet metal parts

⚠ CAUTION!

Danger of injury at sharp edges, sharp corners and thin sheet metal parts!

Sharp edges, sharp corners and thin sheet metal parts of the plate and rotary heat exchangers or of the cooling or heating coil may cause cuts or grazes.

- Be careful when working on these components.
- Wear protective gloves, safety shoes and a hard hat.

Physical damage during transport

! NOTICE!

Improper transport can cause physical damage!

Improper transport can cause packages to fall or topple. This can cause a significant amount of damage.

- Avoid setting down or knocking the packages with excessive force Look out for protruding AHU components
- Make sure that roof material on air handling units intended for outside installation is not damaged by the hoisting devices and lifting gear

3.3.2 Transporting packages by forklift or pallet truck

The attachment points and weights vary depending on the air handling unit design. These must be taken from the order-specific technical documents.

Personnel:

- Forklift drivers

Protective equipment:

- Industrial safety helmet
- Protective clothing
- Hearing protection
- Safety shoes
- Protective gloves

NOTICE!

Forklifts or pallet trucks can cause physical damage!

Improper transportation with forklifts or pallet trucks may damage the AHU components.

– Never use forklifts to lift packages without sufficiently protecting the unit profiles if there is no base frame

Fig. 5: Transport with a forklift

1. Drive the forks (Fig. 5/3) of the forklift between the square timber frames (Fig. 5/2) until they protrude from underneath the base frame (Fig. 5/1) on the opposite side.
2. Ensure that an eccentric centre of gravity will not cause the AHU component to tip.
3. Slowly lift the AHU component and begin transportation.

3.3.3 Transporting packages by crane

Transport with transport tubes and ropes/chains

AHU components can either be transported with ropes/chains or transport tubes.

The transport tube length depends on the width of the AHU components. The table below (↳ *'Transport tubes' on page 12*) shows the recommended minimum lengths for the transport tubes.

Transport tubes

Width of the AHU component (clearance dimension) in [mm]	Length of the transport tube in [mm]
612	1058
918	1364
1224	1670

The transport tubes are not included in the air handling unit supply package. Only use transport tubes with sufficient load-bearing capacity according to the table ↳ *'Transport with transport tubes and ropes/chains' on page 12* for transportation.

Designation	Outer diameter in [mm]	Wall thickness [mm]	Permissible AHU component weight in [kg]
S235J2H seamless steel tube	48.3	5	≤ 1500

Alternative tubes with the same load-bearing capacity or higher may also be used.

Personnel:

- Crane driver

Protective equipment:

- Industrial safety helmet
- Protective clothing
- Hearing protection
- Safety shoes
- Protective gloves

NOTICE!

Cranes can cause physical damage!

Improper transportation by crane may damage the AHU components.

– Protect the edges of the AHU components with spacers.
– Keep transport chains or ropes away from each other in the top section with suitable spreaders.

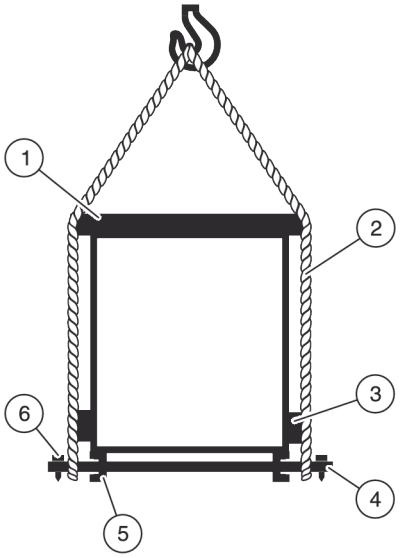

Fig. 6: Transport with crane and transport tubes

1. Remove the base frame plugs from the drilled holes in the base frame (Fig. 6/5) of the AHU components.
2. Push transport tubes (Fig. 6/4) through the drilled holes in the base frame.
3. Place the loops of the chains or ropes (Fig. 6/2) around the end of the tubes.

DANGER!

Danger due to chains or ropes slipping off

Potentially fatal situations may occur if the chains or ropes slip off the transport tubes.

Suitable measures must be taken to prevent this from happening.

4. Protect the edges with spacers (Fig. 6/3).
5. Keep chains or ropes away from each other in the top section with suitable spreaders (Fig. 6/1).
6. Ensure that the AHU component is not damaged by the chains or ropes.
7. Align the attachment with the centre of gravity to ensure a symmetrical load distribution.
8. Slowly lift the AHU component and begin transportation.

Transporting units for inside installation with beckets/ring nuts and ropes/chains

Without cross member

Personnel:

- Crane driver

Protective equipment:

- Industrial safety helmet
- Protective clothing
- Hearing protection
- Safety shoes
- Protective gloves

WARNING!

Danger of death due to falling AHU components.

Overloaded attachment points may result in falling AHU components. Danger of death.

– Only use beckets to transport AHU components for indoor installation up to a maximum weight of 1500 kg.

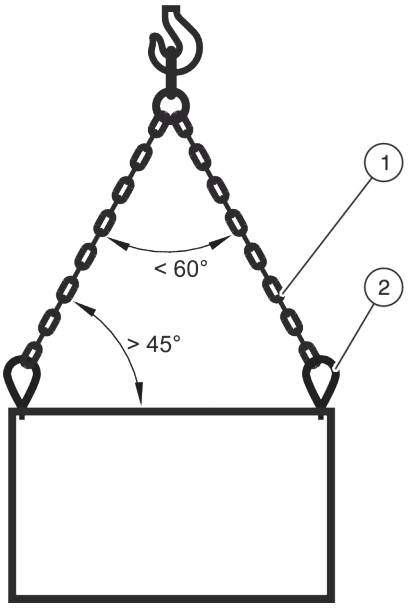

Fig. 7: Transport with crane and beckets or ring nuts (without cross member)

1. Remove the covers from the threaded holes in the roof-side corners of the AHU components.
2. Screw all beckets or ring nuts (Fig. 7/2) fully into all threaded holes.
3. Fix the ropes or chains (Fig. 7/1) to the beckets or ring nuts.

Crane gear (cross member and tackle) is recommended when there are six or more attachment points.

4. Maintain an angle greater than 45° between the rope or chain and the top of the unit.
5. Do not exceed an angle of spread of 60°.
6. Ensure that the AHU component is not damaged by the chains or ropes.
7. Align the attachment with the centre of gravity to ensure a symmetrical load distribution.
8. Slowly lift the AHU component and begin transportation.

With cross member

Personnel:

- Crane driver

Protective equipment:

- Industrial safety helmet
- Protective clothing
- Hearing protection
- Safety shoes
- Protective gloves

WARNING!

Danger of death due to falling AHU components.

Overloaded transport slings may result in falling AHU components. Danger of death.

– Only use transport slings to transport AHU components for indoor installation up to a maximum weight of 1500 kg.

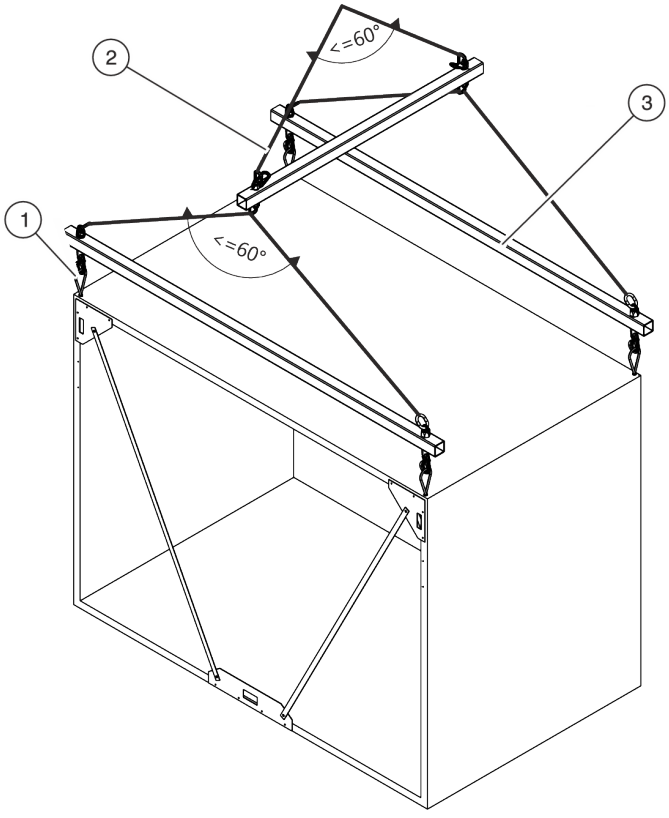

Fig. 8: Transport with crane and beckets or ring nuts (with cross member)

1. Remove the covers from the threaded holes in the roof-side corners.
2. Screw all beckets or ring nuts (Fig. 8/1) fully into all threaded holes.
3. Hook the cross members (Fig. 8/3) into the beckets or ring nuts.
4. Connect the cross members with chains (Fig. 8/2).

5. ▸ Do not exceed an angle of spread of 60°.
6. ▸ Align the attachment with the centre of gravity to ensure a symmetrical load distribution.
7. ▸ Slowly lift the AHU component and begin transportation.

3.4 Storing packages

Only store TROX air handling units temporarily under the following conditions:

- Free from dust and dirt and protected against damage
- Packaged and stored away from the effects of the weather
- Package air handling units/AHU components that are supplied without protective packaging
- Select the required protective packaging to ensure adequate rear ventilation and to eliminate the danger of condensation forming
- Set down on even ground
- Ensure an air temperature from -10 °C to +50 °C
- Store air handling units/AHU components in a dry, non-condensing atmosphere
- Close off any open ventilation connections

NOTICE!

White rust can cause physical damage!

The packaging and moisture can cause white rust to form on the galvanised surfaces of the heat exchangers. This can lead to physical damage.

– Always keep the heat exchangers dry in storage.
– Remove protective film.

In some circumstances, the packages may include storage information that is more detailed than the requirements specified here. Follow these accordingly.

3.5 Unpacking packages

Only dispose of packaging shortly before installation if there is no transport damage, ↬ *Chapter 3.2 'Delivery check' on page 10*.

ENVIRONMENT!

Incorrectly disposing of the packaging can be bad for the environment!

Packaging materials can, in many cases, be reconditioned and recycled. Incorrectly disposing of packaging materials can be dangerous for the environment.

– Dispose of packaging materials in an environmentally friendly manner in accordance with the local waste disposal regulations.
– If necessary, employ a specialist disposal company to dispose of the packaging.

4 Installation and assembly

The air handling unit must be assembled after delivery and safety devices must be installed if it is delivered as several components.

4.1 Safety notes on installation and assembly

Setup and assembly

WARNING!

Danger of death if set up and assembled incorrectly!

Errors when setting up and assembling the AHU components can lead to potentially fatal situations and cause significant physical damage. Furthermore, there is also a risk that the air handling unit will not function correctly as a result.

– Air handling units must only be set up and assembled by systems mechanics for sanitary engineering, heating engineering and air conditioning systems.

Working at great heights

WARNING!

Danger of falling when carrying out work at great heights.

Working at great heights without safety equipment and using unsuitable or damaged climbing aids can cause people or materials to fall. This can result in serious injuries or even death.

– When working at great heights, personnel must use suitable climbing aids that are in good order and condition.
– Secure tools and materials against falling.
– Always wear safety shoes, protective work clothing, and a safety helmet.
– Wear a safety harness.

Combination with units/systems

WARNING!

Danger of injury as a result of combining with other units/systems.

Combining the air handling unit with other units/systems, e.g. media supply, ducts, etc., can lead to dangerous situations, injuries, or even death.

– Ensure that other units/systems are properly connected to the air handling unit.
– The operator/system manufacturer is responsible for planning and installing the additional safety equipment.

Sharp edges, sharp corners and thin sheet metal parts

CAUTION!

Danger of injury at sharp edges, sharp corners and thin sheet metal parts!

Sharp edges, sharp corners and thin sheet metal parts of the plate and rotary heat exchangers or of the cooling or heating coil may cause cuts or grazes.

– Be careful when working on these components.
– Wear protective gloves, safety shoes and a hard hat.

4.2 Requirements for the installation location

4.2.1 Requirements for indoor installation

Installation room

The air handling unit must only be installed in a room that meets the following conditions:

- The air handling unit must not be used in potentially explosive atmospheres.
- The room has been designed in a way that is compliant with the applicable building codes, with particular regard to the specific functions of the technical systems installed. Country-specific standards for plant rooms must be considered, if applicable
- The room is:
  – clean
  – dry
  – free from conductive dust particles
  – free from strong electromagnetic fields
  – free from aggressive media
  – free from frost, and
  – fitted with a correctly functioning drainage system

- The space required for installing, operating, servicing, and repairing all AHU components has been taken into consideration The maintenance access is at least as deep as the units
- The room must provide a stable and flat foundation in accordance with the site requirements (see order-specific air handling unit data sheet from TROX)
- Never use the air handling unit for static tasks or as the building roof

Leaking water

! NOTICE!

Physical damage as a result of leaking water!

If the water-carrying system is not sealed tightly and water leaks out, it may cause significant damage to the building.

– Ensure that leaking liquids are diverted away

Condensation

! NOTICE!

Condensation can cause physical damage!

When the system is at a standstill and outdoor temperatures are low, water vapour from the building or the environment may condense in the air handling unit.

– Prevent condensation from forming with the help of shut-off dampers facing towards the building, or by using a heating coil.

Installation room foundation

The installation room foundation must fulfil the following requirements:

- The foundation consists of horizontal, flat and stable concrete or a flat steel substructure
- The natural frequency of the substructure, particularly in the case of steel structures, is sufficiently different from the excitation frequency of rotary components, such as fans, motors, pumps, refrigerant condensers, etc.
- For air handling units with condensate drains, the height of the substructure is at least as high as the siphon, see *'Connecting siphon' on page 27*
- For the additional damping of structure-borne noise – for example, with rubber or elastomer boards – between the foundation and air handling unit, make sure all AHU components are precisely aligned (movement of doors, proper sealing at connections)

4.2.2 Requirements for outdoor installation

Installation location

The following points must be observed for air handling units for outdoor installation:

- The installation location is:
  - not an area with a potentially explosive atmosphere
  - free from conductive dust particles
  - free from strong electromagnetic fields
  - free from aggressive media, and
  - fitted with a correctly functioning drainage system
- The installation location must provide a stable and flat foundation in accordance with the site requirements (see order-specific air handling unit data sheet from TROX)
- The space required for installing, operating, servicing, and repairing all AHU components has been taken into consideration The maintenance access is at least as deep as the units
- The installation location must be secured to prevent persons, tools, and materials from falling in accordance with local regulations
- Suitable fall protection equipment must be available
- The AHU components must not be accessible to unauthorised persons
- All AHU components must be accessible without posing a danger to people
- The maximum permissible roof loads, the building structural engineering calculations, and external influences such as rain, snow, wind, direct sunlight, etc., must be taken into consideration
- Cabling between the air handling unit and the external switch cabinet must be carried out by a professional and with due regard to external influences such as rain, snow, wind, direct sunlight, etc.
- All media lines and the AHU components to which they are connected must be frost-proof
- Never use the air handling unit for static tasks or as the building roof

Foundations in the outdoor area

- The information regarding the foundation of the installation room applies, *'Installation room foundation' on page 17*
- For roof installation, check the load capacity and support structure of the roof; consult an engineer if necessary
- There must be a continuous steel substructure along the entire length of the air handling unit
- The steel substructure supports must be designed in such a way that the maximum deflection under load is L/500 (L = support length). A maximum deflection under load of 10 mm must not be exceeded

- Waterproof the edge of the roof under the air handling unit and also the gutters and structural features on the roof
- Insulate on-site base frames to prevent condensation
- In areas with heavy snowfall, choose an installation location where snow will not affect the operation of the air handling unit. Select the height of the substructure accordingly.

Leaking water

NOTICE!

Physical damage as a result of leaking water!

If the water-carrying system is not sealed tightly and water leaks out, it may cause significant damage to the building.

– Ensure that leaking liquids are diverted away

4.3 Insulating the air handling unit from vibrations

Where applicable, bases that insulate vibrations and noise can be used to reduce the transfer of vibrations to the support structure:

- For installation on flat ground with no special requirements regarding structure-borne sound insulation, TROX recommends isolating the air handling unit from the foundation, e.g. using rubber or elastomer boards
- For sound installation, the requirements and the sound power level of the air handling unit (see order-specific air handling unit data sheet from TROX) must be compared and the required measures must be determined by an acoustician. Splitter sound attenuators can be used for sound insulation purposes if applicable.

4.4 Setting up and assembling air handling unit/AHU components

4.4.1 Setting up air handling unit/AHU components

Check seals on AHU components

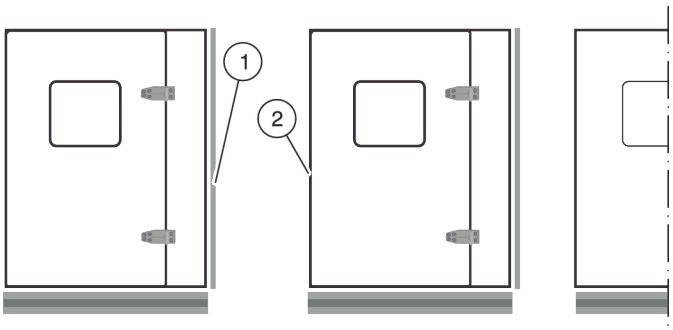

Fig. 9: Seals on AHU components

The AHU components are fitted with seals (Fig. 9/1) on the right-hand side ex works The left-hand sides of the components do not have seals (Fig. 9/2)

Personnel:

- HVAC technician

Protective equipment:

- Protective gloves

Deformed seals return to their original form approx. 60 min after the transport fastenings have been removed.

Check that the seals are complete and intact and that they fulfil the sealing function.

Setting up AHU components

Personnel:

- HVAC technician

Protective equipment:

- Industrial safety helmet
- Safety shoes
- Protective gloves

Sliding plates (Fig. 10/3) significantly simplify the process of positioning the AHU components (Fig. 10/1) on ground with a high friction coefficient (e.g. rubber or elastomer boards (Fig. 10/4)).

The AHU components must be arranged in the air handling unit in accordance with the order-specific approval drawing.

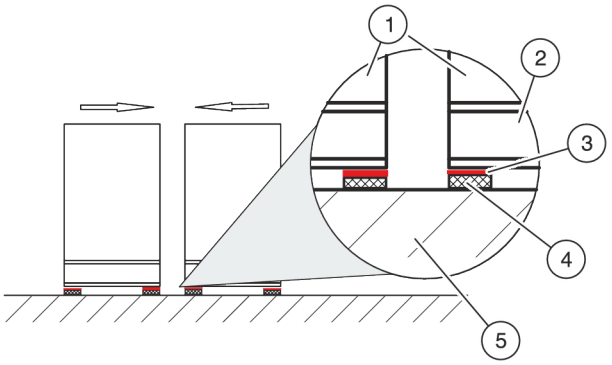

Fig. 10: Unit connections in vibration-reducing installations

1. ▸

   The different weights of the AHU components compress the rubber or elastomer boards differently. Adjust the resulting height difference on site.

   The sliding plates provided by others (Fig. 10/3) must be positioned under the unit base (Fig. 10/2) of the individual AHU components (Fig. 10/1).

2. ▸

   When installing outdoors, ensure that the self-adhesive sealing tape can still be attached, see ↳ 'Assembling AHU components in the outdoor area' on page 20.

   Assemble the AHU components as close together as possible.

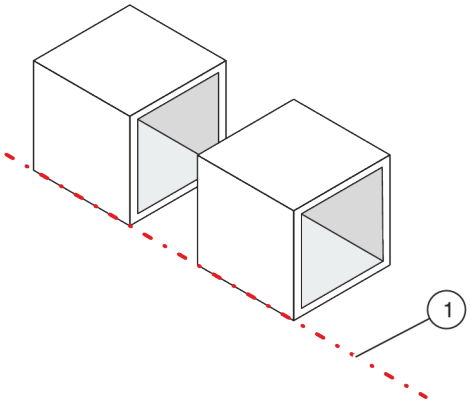

Fig. 11: Aligning AHU components

3. ▸ Align the AHU components so that they are flush with one another (Fig. 11/1).

Setting up with base

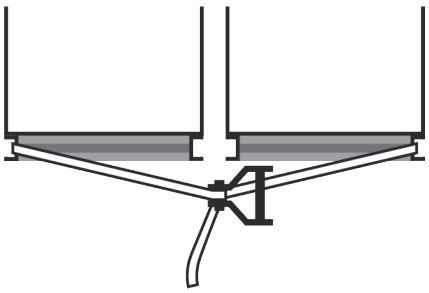

Fig. 12: Attaching a tension belt

1. ▸ Attach a tension belt to the base of 2 AHU components (Fig. 12).
2. ▸ Tighten tension belt.

   ⇨ The AHU components are pulled together by the base.

4.4.2 Before installation

Before installation

- All transport tubes and other transport fastenings on and in the AHU components must be removed
- All tools must be present
- All other applicable documents must be present
- All materials and accessories supplied separately must be removed from the AHU components

Deformed seals return to their original form approx. 60 min after the transport fastenings have been removed.

Required tools

- Drill/cordless screwdriver
- Bit holder with bit set
- Allen key (width across flats: 3, 5, 6, 10)
- Slot screwdriver size 6
- Bits (Torx/rounded hexagon socket (T30))
- Open-end spanner/ring spanner (width across flats: 6 and 10)
- Water pump pliers
- Tension belts or suitable lifting gear

4.4.3 Assembling AHU components

Assembling AHU components in the outdoor area

Personnel:

- HVAC technician

Protective equipment:

- Safety harness
- Industrial safety helmet
- Protective clothing
- Hearing protection
- Safety shoes
- Protective gloves

Materials:

- Self-adhesive sealing tape
- Hexagonal bolts with nuts and washers
- Raised countersunk screws, M6 x 12
- Roof segment with pre-installed roof supports
- 2 x roof supports
- 4 x cylinder screws
- 4 x ring seals
- Self-tapping screws

When installing the air handling unit in the outdoor area, proceed as follows:

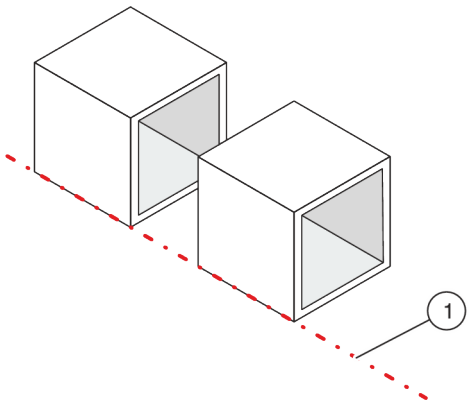

Fig. 13: Aligning AHU components

1. ▸ Align the AHU components so that they are flush with one another (Fig. 13/1).

Roof installation

2. ▸ Attach ring seals to the four cylinder screws.

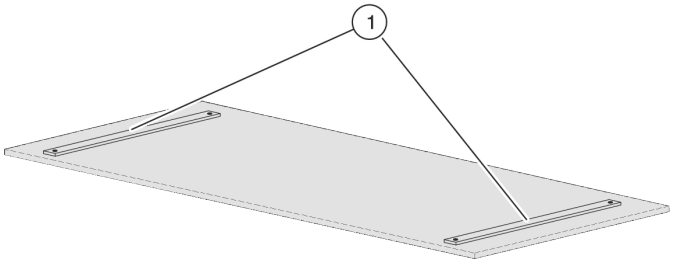

Fig. 14: Roof supports

3. ▸ Using the 4 cylinder screws, screw the roof supports (Fig. 14/1) firmly to the roof segment.

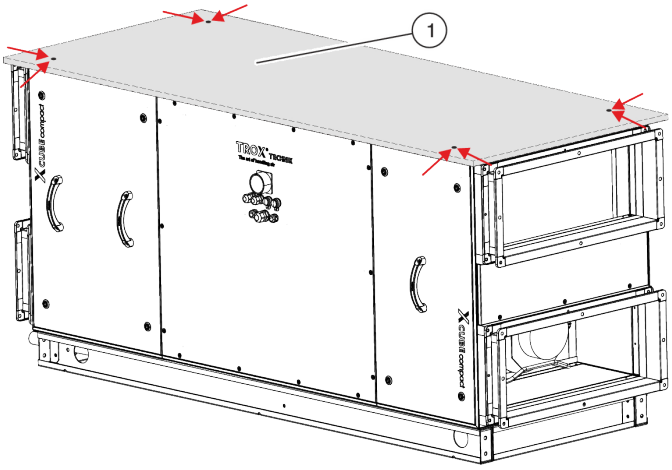

Fig. 15: Roof installation

5. ▸ Place the roof segment (Fig. 15/1) onto the roof supports and screw in place using the self-tapping screws.

Attaching base frame plugs

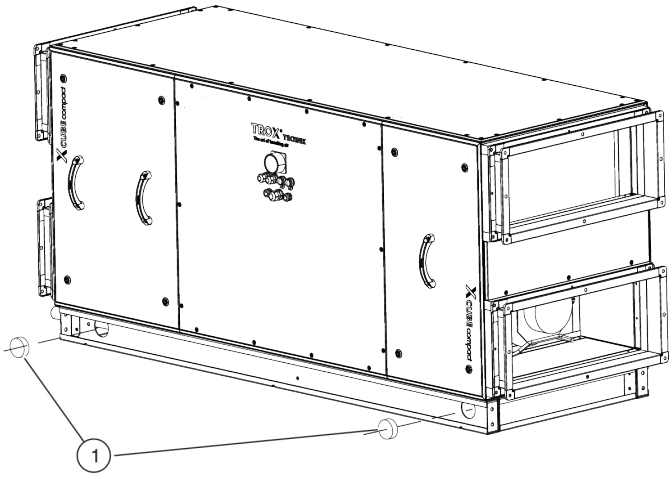

Fig. 16: Attaching plugs

6. ▸ Seal the transport openings in the base of the air handling unit with the plugs (Fig. 16/1) provided.

   ⇨ This prevents water from getting into outdoor units.

Assembling AHU components in the indoor area

Personnel:

- HVAC technician

Protective equipment:

- Industrial safety helmet
- Protective clothing
- Hearing protection
- Safety shoes

! NOTICE!

Incorrect assembly can cause physical damage!

Incorrectly assembling the individual AHU components can damage the condensate drain.

– Protect the condensate drain from damage.

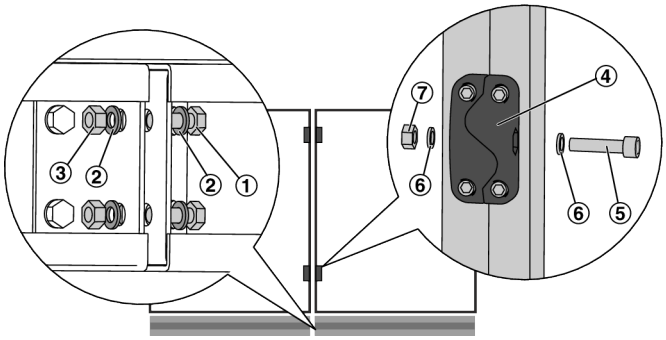

Fig. 17: Screwing the AHU components in place

① Hexagon head screws
② Washers
③ Nuts
④ Component connectors
⑤ Allen screw
⑥ Spring washers

▸ The AHU components must be evenly screwed onto the front of the base frames and onto the component connectors.

Removing the noise insulating connectors

Personnel:

- HVAC technician

Protective equipment:

- Industrial safety helmet
- Protective clothing
- Hearing protection
- Safety shoes

The noise insulating connectors are pre-installed at the factory. The noise insulating connectors may need to be removed before installing accessories.

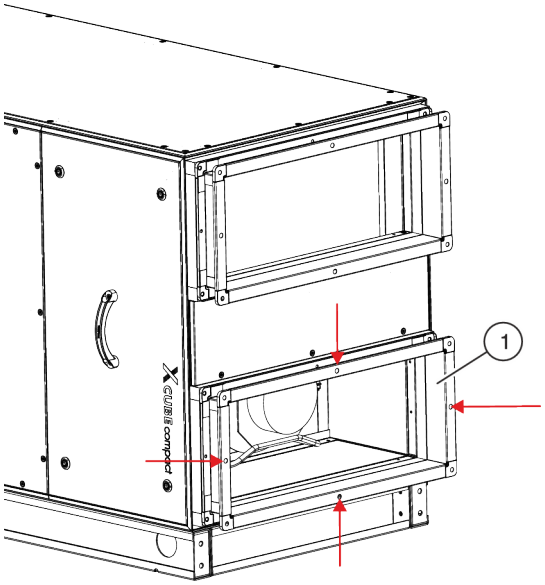

Fig. 18: Removing the noise insulating connectors

- Unscrew the four Allen screws (M6×50) (Fig. 18/ red arrows) on the noise insulating connector and take off the noise insulating connector (Fig. 18/1).

Installing the noise insulating connectors

Personnel:

- HVAC technician

Protective equipment:

- Industrial safety helmet
- Protective clothing
- Hearing protection
- Safety shoes

The noise insulating connectors are pre-installed at the factory. The noise insulating connectors may need to be installed after installing accessories. In order to connect the air handling unit to the ducting, the noise insulating connector must be screwed onto the supply air side of the air handling unit.

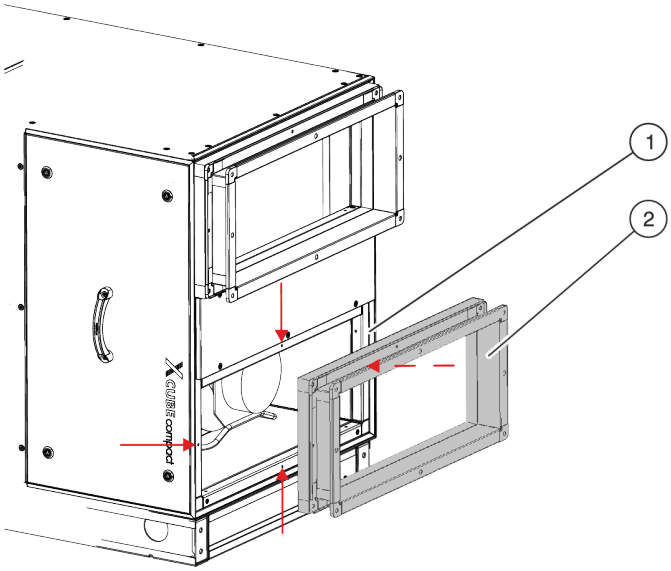

Fig. 19: Installing the noise insulating connectors

- Screw the noise insulating connector (Fig. 19/2) firmly to the frame of the air handling unit (Fig. 19/1) using four Allen screws (M6×50).

Installing ducts

Personnel:

- HVAC technician

Protective equipment:

- Industrial safety helmet
- Hearing protection
- Protective clothing
- Safety shoes
- Protective gloves

1. Fix the air ducts to the air handling unit without exercising any tension.
2. Isolate air ducts with spigots or profile frames.
3. Isolate the air ducts with spigots or profile frames correctly and protect from weather.

4.4.4 Installing accessories

Installing the accessory module on the air handling unit

Personnel:

- HVAC technician

Protective equipment:

- Industrial safety helmet
- Protective clothing
- Hearing protection
- Safety shoes
- Protective gloves

To install the accessory module on the air handling unit, proceed as follows:

If the air handling unit is ordered together with an accessory module, the supply air spigot (Fig. 19/2) is already screwed onto the supply air side of the accessory module.

If there is not enough space available in the installation location, the air handling unit and the accessory module must be installed offset from one another. For offset unit installation, two additional unit-specific spigots must be ordered separately and installed on the air handling unit and the accessory module (‘Installing the noise insulating connectors’ on page 22).

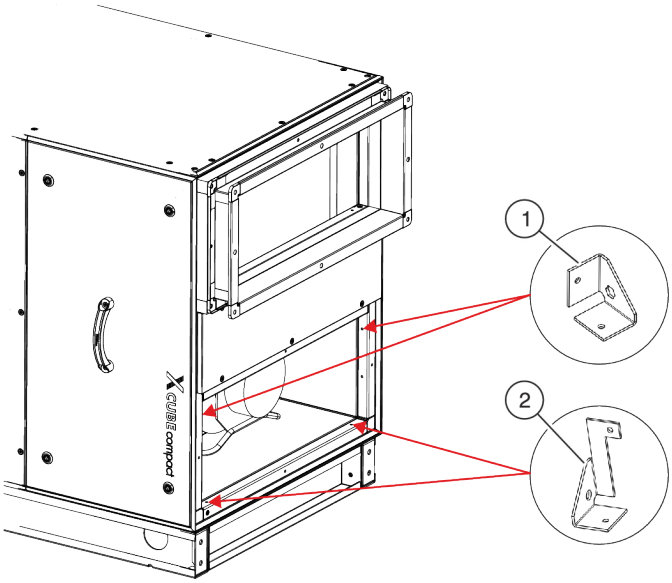

Fig. 20: Gusset plates

1. Screw two standard gusset plates (Fig. 20/1) to the upper unit holes using the screws provided.
2. Screw two gusset plates with cut-out (Fig. 20/2) to the lower unit holes using the screws provided.
3. Position the accessory module so that the holes in the gusset plates are opposite each other (‘Setting up AHU components’ on page 19).
4. Earth the accessory module on the operating side on the hexagon head screw (Fig. 21/3) on the lower gusset plate.

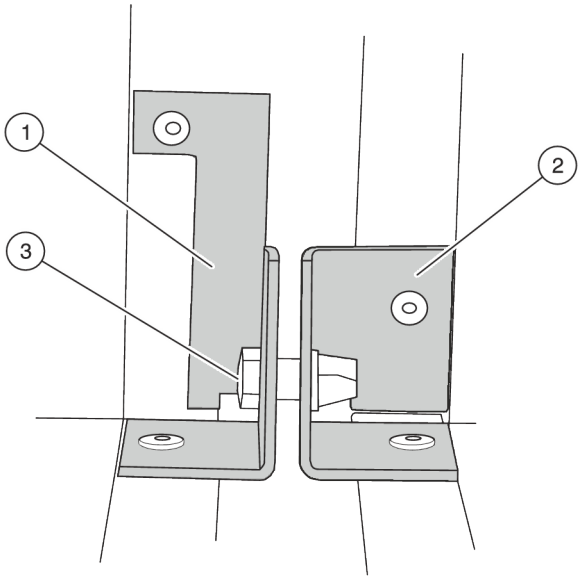

Fig. 21: Gusset plates

5. Screw all gusset plates (Fig. 21/1+2) in place using hexagon head screws (Fig. 21/3).

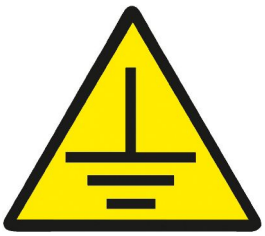

Fig. 22: Earthing sticker

6. Affix the earthing sticker (Fig. 22) next to the earthed gusset plate.

   ⇨ The accessory module is installed on the air handling unit.

Roof installation for accessories

Personnel:

- HVAC technician

Protective equipment:

- Industrial safety helmet
- Protective clothing
- Hearing protection
- Safety shoes
- Protective gloves

To install the roof on the accessory module, proceed as follows:

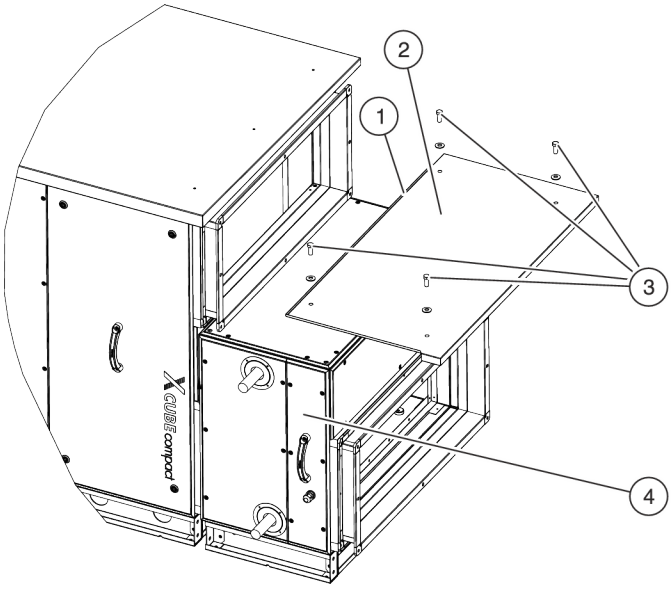

Fig. 23: Roof

1. Attach the seal (Fig. 23/1) between the roof (Fig. 23/2) and the accessory module (Fig. 23/4).
2. Screw the roof (Fig. 23/2) of the accessory module (Fig. 23/4) onto the accessory module (Fig. 23/4) using the four screws (Fig. 23/3).

5 Installation

5.1 Safety notes on installation

Incorrect installation

⚠ WARNING!

Danger of death due to incorrect installation!

Mistakes during installation can lead to life-threatening situations and cause considerable physical damage.

– The unit must only be connected to the power supply by skilled qualified electricians.
– All other installation work must be carried out by an HVAC technician.

Hot surfaces

⚠ WARNING!

Risk of injury caused by hot surfaces!

The surfaces of components can get very hot during operation. Skin contact with hot surfaces causes severe skin burns.

– Ensure that pipes to capacitors and heaters are insulated correctly.

Combination with units/systems

⚠ WARNING!

Danger of injury as a result of combining with other units/systems.

Combining the air handling unit with other units/systems, e.g. media supply, ducts, etc., can lead to dangerous situations, injuries, or even death.

– Ensure that other units/systems are properly connected to the air handling unit.
– The operator/system manufacturer is responsible for planning and installing the additional safety equipment.

Sharp edges, sharp corners and thin sheet metal parts

⚠ CAUTION!

Danger of injury at sharp edges, sharp corners and thin sheet metal parts!

Sharp edges, sharp corners and thin sheet metal parts of the plate and rotary heat exchangers or of the cooling or heating coil may cause cuts or grazes.

– Be careful when working on these components.
– Wear protective gloves, safety shoes and a hard hat.

5.2 Before installation

The following requirements must be met prior to installation:

- The other applicable documentation must be present (↳ *'Other applicable documentation' on page 3*)
- The installation requirements must be fulfilled; see air handling unit data sheet from TROX
- All tools must be present

5.3 Changing operating side

The operating side of the air handling unit can be chosen freely. The control panel can be attached to the front or rear side of the air handling unit.

1. Switch off the air handling unit at the on-site main switch and secure it from being reactivated.

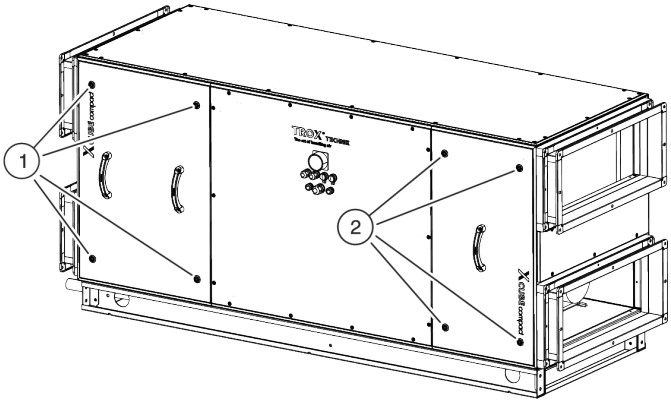

Fig. 24: Opening inspection access panels

2. Open the compression twist locks (Fig. 241+2) on both inspection access panels on the front side, right and left, using an Allen key (10 mm).
3. Remove both inspection access panels on the front side, right and left, using the handles.

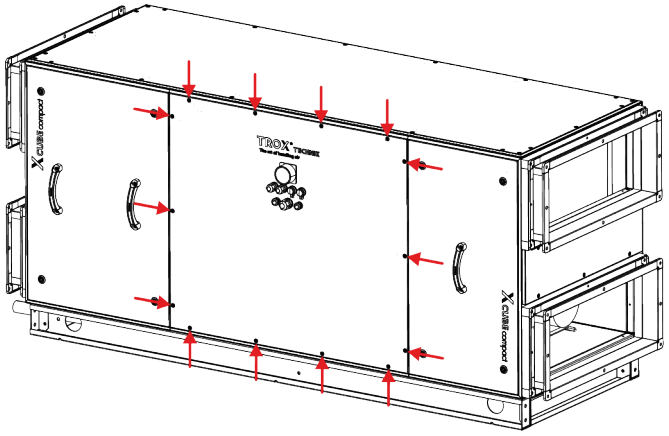

Fig. 25: Central inspection access panels

4. Unscrew the screws (Fig. 25/arrows) on the central inspection access panels on the front side.
5. Carefully pull the inspection access panels forwards.
6. Disconnect the plug connections on the inside of the inspection access panels.

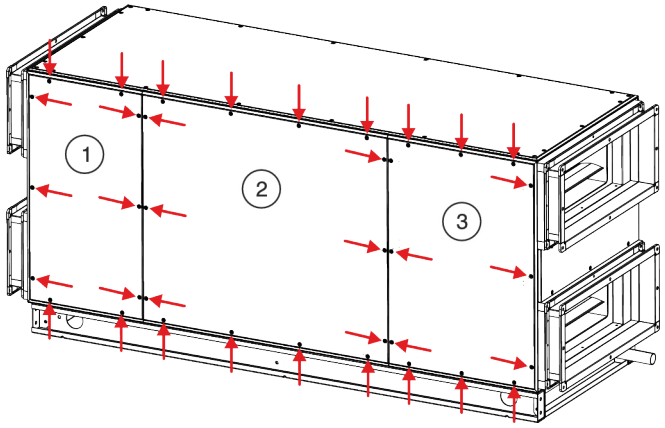

Fig. 26: Rear inspection access panels

7. Unscrew the screws (Fig. 26/arrows) on the three rear-side inspection access panels (Fig. 26/1+2+3).
8. Remove the three rear-side inspection access panels (Fig. 26/1+2+3).

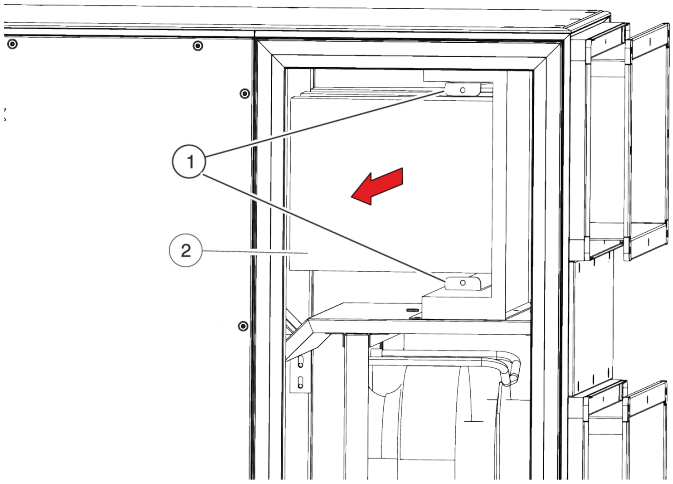

Fig. 27: Clamping rails

9. Pull out the two clamping rails (Fig. 27/1).
10. Pull out the filter (Fig. 27/2).
11. Remove the clamping rails (Fig. 27/1) and install on the rear side of the air handling unit.
12. Insert the filter (Fig. 27/2) on the rear side of the air handling unit.
13. Press in the clamping rails (Fig. 27/1).
14. Fix the right and left inspection access panels on the rear side using the compression twist locks.

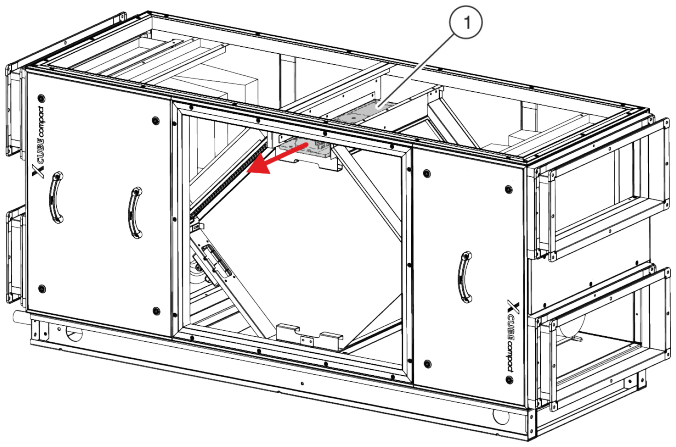

Fig. 28: I&C tray

15. Pull out the I&C tray (Fig. 28/1).
16. Pull out the plug connections for the fans.
17. Pull out the I&C tray, rotate it by 180° and reinsert. Alternatively, insert the I&C tray on the other side of the air handling unit.
18. Reconnect all the plug connections for the fans.
19. Fully insert the I&C tray.
20. Reconnect the plug connections on the inside of the inspection access panels.
21. Insert the central inspection access panels and fix in place with the compression twist locks.
22. Screw the three inspection access panels (Fig. 26/1+2+3) firmly in place on the front side of the air handling unit with the screws.

5.4 Connecting siphon to air handling unit

Electric current

WARNING!

Danger of death due to electric current!

Danger of death if electrical components come into contact with water due to leakages. This can also damage the air handling unit.

– Lay drainage pipes in such a way that they cannot be mechanically or thermally destroyed

Connecting siphon

The air handling unit must not be directly connected to the sewage system. The air handling unit must always be connected to the sewage system by means of a siphon.

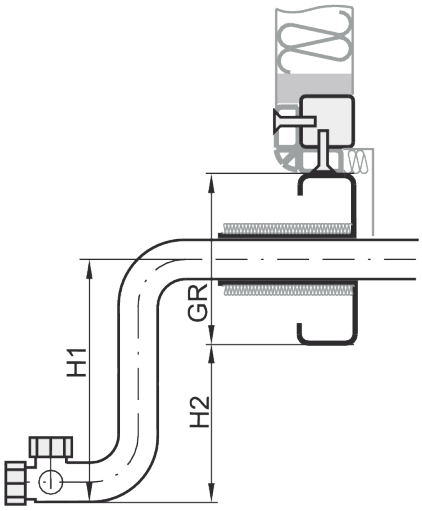

Fig. 29: Siphon for negative pressure use

Formula symbols	Description
P	Pressure in the air handling unit in Pa; always express value with a positive sign in formulae.
GR	Base frame height in mm

Use the following formulae for calculating H1 and H2 under negative pressure (max. 2900 Pa):

- H1 (mm) = P/10 + 50 mm
- H2 (mm) = H1 – (GR – 60 mm)

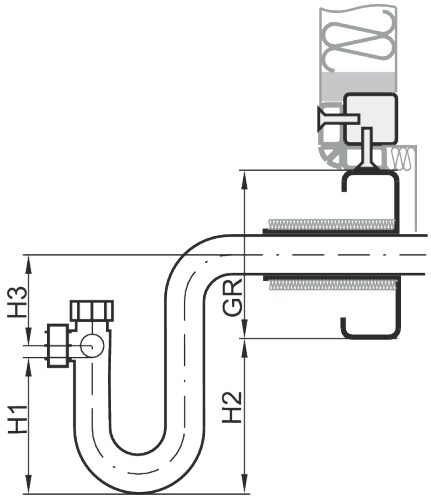

Fig. 30: Siphon for positive pressure use

Use the following formulae for calculating H1, H2, and H3 under positive pressure (max. 1630 Pa):

- H1 (mm) = 1.5 * P/10
- H2 (mm) = H1 + (110 – GR)
- H3 ≥ 50 mm

Personnel:

- HVAC technician

Protective equipment:

- Industrial safety helmet
- Hearing protection
- Protective gloves
- Protective clothing
- Safety shoes

NOTICE!

Improper connection can cause physical damage!

Improper connection can damage the connecting cables and the siphon until they are destroyed.

– Ensure that no forces or vibrations are created by on-site connections to the building
– For outdoor installations, the connecting cables must be frost-proof

1. ▸ Calculate the H1 and H2 values. H1 and H2 give H3.

   Compare the H3 value with the limit.

   ⇨ If the value determined for H3 is above the limit, a different siphon which corresponds to the H3 limit must be used.

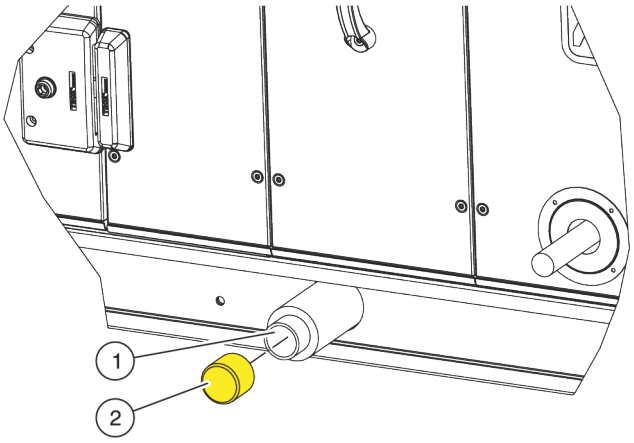

Fig. 31: Condensate drain

2. ▸ Remove the protective cap(s) (Fig. 31/2) from the drain (Fig. 31/1) of the condensate drip tray(s).
3. ▸ Connect the siphons to the condensate drains (Fig. 31/1).
4. ▸ Connect the siphons to the sewage system.

For air handling units that are installed outside or in areas at risk of frost, frost-protection equipment must be installed for the siphon, ↬ *Appendix 'Anti-frost heating for siphons' on page 61*.

5.5 Connecting the heater/cooler

Electric current

WARNING!

Danger of death due to electric current!

Danger of death if electrical components come into contact with glycol/water mixtures or water due to leakages. This can also damage the air handling unit.

– Lay connecting cables in such a way that they cannot be mechanically or thermally destroyed
– Do not lay connecting cables over electrical components or switch cabinets

Heat exchangers must be connected in counterflow unless a direct current connection is expressly specified. The transferred output that is calculated is only guaranteed in counterflow.

Only attach factory-specified holders or fasteners to the walls and frame, or leaks may be caused.

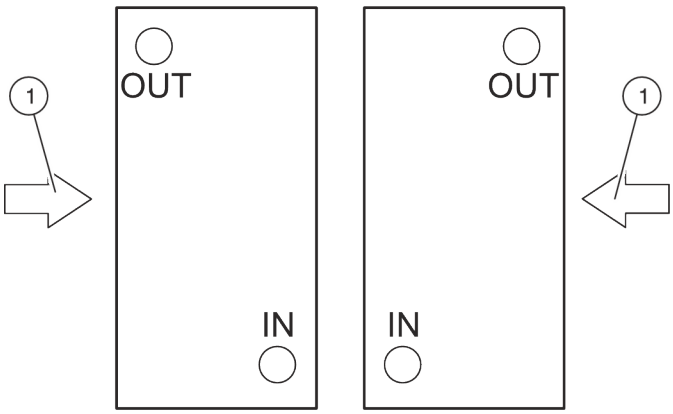

Fig. 32: Heat exchanger connections in counterflow

1 Direction of air inflow

There are stickers on the connection side of the heat exchangers that indicate the feed (Fig. 32/IN) and return flow connections (Fig. 32/OUT) in the counterflow principle.

For removable heat exchangers and droplet eliminators, connections with bends and detachable connections must be connected so that the heat exchangers and droplet eliminators can be removed.

Personnel:

- HVAC technician

Protective equipment:

- Industrial safety helmet
- Protective clothing
- Hearing protection
- Protective gloves
- Safety shoes

NOTICE!

Improper connection can cause physical damage!

Improper connection can cause heat exchanger cables to twist or external influences to have a permanent effect on the heat exchanger. This can result in the heat exchanger being physically damaged or destroyed.

- Ensure that no forces or vibrations that affect the heat exchanger are created by the on-site connection
- If necessary, use suitable measures (e.g. support structure) to carry the weight of the on-site connection
- Ensure that the connection point of the heat exchanger is not used as a fixing point
- Hold up the heat exchanger thread connections during connection using a suitable tool (e.g. pipe wrench)
- For outdoor installations, the connecting cables must be frost-proof
- Ensure that no air traps are created in which air pockets can form

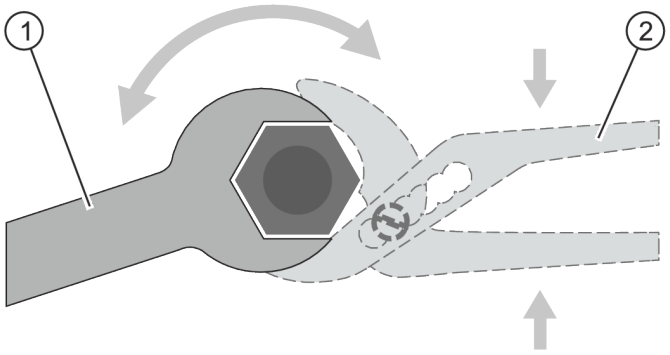

Fig. 33: Holding up with pipe wrench

1. Fix the heat exchanger thread connection using a pipe wrench (Fig. 33/2).
2. Connect the heat exchanger to the on-site connection whilst permanently holding up the thread connection using a hexagon spanner (Fig. 33/1).

5.6 Connecting the air handling unit to power supply

Connecting air handling unit to the mains

DANGER!

Danger of death due to electric current!

Danger of death if live components are touched.

- The unit must only be connected to the power supply by skilled qualified electricians
- For air handling units with I&C, the circuit diagram supplied in this installation manual must be followed, *'Other applicable documentation' on page 3*
- Lay power supply lines in such a way that they cannot be mechanically or thermally destroyed
- Bridge all non-conductive connections, e.g. decoupled profile frames, flexible connections, and vibration dampers, with equipotential bonding
- Earth the air handling unit using state-of-the-art techniques
- Secure all connections against disruption
- When connecting the electrical components, follow the manufacturer's specifications, the local electrical regulations (DIN/VDE), and the general recommendations for avoiding electromagnetic interference
- For outdoor installations, consider external influences such as rain, snow, wind, direct sunlight, etc.

Only attach factory-specified holders or fasteners to the walls and frame, or leaks may be caused. Avoid screw joints that pierce the outer covering of the unit and, if unavoidable, seal them so they are waterproof. The minimum protection level is IP65.

The electrical circuit diagrams and terminal plans can be found in the circuit diagram included in the supply package.

1. Connect the electrical components, such as the electric air heater, electric motor, and actuator.
2. Connect the air handling unit to the on-site equipotential bonding system.
3. Check protective conductors and insulation resistance in accordance with EN 60204 (VDE 0113) with due regard to the required safety precautions.

5.7 Connecting the air handling unit to the building

The system owner/system manufacturer is responsible for connecting the air handling unit to the building management system and for the conformity assessment associated with this, ‘Operator's obligations’ on page 8.

5.8 Connecting I&C to on-site PC or on-site network

Network or PC

The installed I&C can be operated using a display (hand-held control) or a PC. All measured values can be viewed and the setpoint values can be set. The PLC has a TCP/IP interface, which can be used to connect it to a normal network.

Personnel:

- HVAC technician

Protective equipment:

- Industrial safety helmet
- Hearing protection
- Protective gloves
- Protective clothing
- Safety shoes

▸ Connect the I&C to the on-site network or on-site PC using a network cable

Modbus RTU

The installed I&C can be connected to an external remote terminal unit (RTU) via the Modbus RS485 interface. The measured values can be viewed and the setpoint values can be set via an external BMS or CTS system.

Furthermore, the installed I&C can be networked with the following bus systems:

- Modbus RTU
- Modbus TCP/IP
- Internal web server
- BACnet
- LON (accessory – subject to charge)

Personnel:

- Skilled qualified electrician

Protective equipment:

- Industrial safety helmet
- Hearing protection
- Protective gloves
- Protective clothing
- Safety shoes

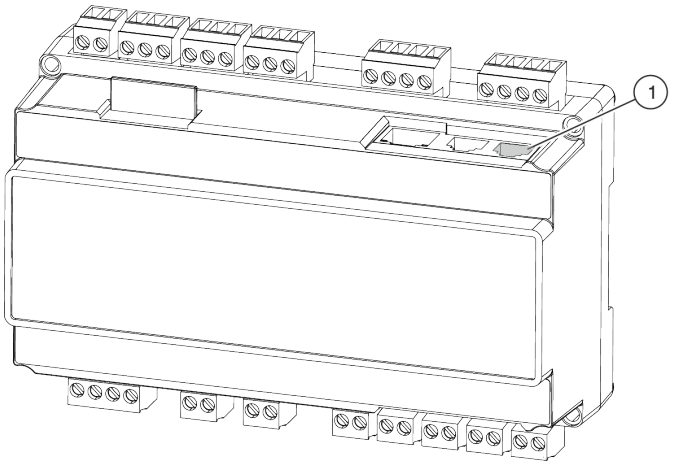

Fig. 34: Modbus RS485 interface

▸ Connect I&C to the external RTU (remote terminal unit) via the Modbus RS485 interface (Fig. 34/1).

6 Initial commissioning

6.1 Safety notes for the initial commissioning

Incorrect initial commissioning

⚠ WARNING!

Danger of death due to incorrect initial commissioning!

Mistakes during the initial commissioning can lead to life-threatening situations and cause considerable physical damage.

– Work on the power supply and electric motors must only be carried out by skilled qualified electricians.
– All other initial commissioning steps must be carried out by an HVAC technician.

Pressure-side inspection access openings

⚠ CAUTION!

Airflow on the pressure side of the fan can cause injury!

The airflow on the pressure side of the fan can throw open inspection access openings as far as the safety catch when opened, which can lead to injuries.

– Open the inspection access openings on the pressure side carefully.

Sharp edges, sharp corners and thin sheet metal parts

⚠ CAUTION!

Danger of injury at sharp edges, sharp corners and thin sheet metal parts!

Sharp edges, sharp corners and thin sheet metal parts of the plate and rotary heat exchangers or of the cooling or heating coil may cause cuts or grazes.

– Be careful when working on these components.
– Wear protective gloves, safety shoes and a hard hat.

6.2 Before initial commissioning

If accessories are installed, read the installation and commissioning manual for accessories prior to initial commissioning.

The air handling unit has been set up, assembled, and installed in accordance with this installation manual.

Before initial commissioning, check that the whole casing and the following parts are intact:

- Inspection access openings
- Seals
- Handles and levers
- Connections
- Panels

Before initial commissioning:

- Remove any protective films
- Check that the units are air-tight
- Check the inspection access openings for proper function and tolerances
- Setting up the centrifugal fan
- Insert the filters, *‘Inserting the filters’ on page 32*
- Set up the heating coil/cooling coil, *‘Commissioning the heater/cooler’ on page 33*
- Set up the multileaf dampers, *‘Setting up multileaf dampers’ on page 33*
- Set up rotary heat exchanger, *‘Setting up rotary heat exchangers’ on page 35*
- Set up the plate heat exchanger, *‘Setting up plate heat exchangers’ on page 36*
- Remove the protective caps from the condensate drains and connect the siphon, *‘Connecting siphon’ on page 27*

6.3 Installing AHU components

6.3.1 Filter unit

Inserting the filters

Personnel:

- HVAC technician

Protective equipment:

- Industrial safety helmet
- Hearing protection
- Protective clothing
- Protective gloves
- Safety shoes

On completion of the construction phase and the initial commissioning, TROX recommends replacing all filters in the air handling unit to remove contamination in the filters resulting from the construction process.

Always keep at least one set of filters in reserve. Store filters in a dry and dustproof environment away from dirt and the possibility of damage. Do not use filters that have passed the expiration date. The expiration date can be found on the rating plate of the filter.

Never operate the air handling unit without a filter.

1. ▸ Check that the filters are intact.

   Damaged filters can break down during operation and are no longer able to guarantee the filter class.

2. ▸ Fix the filters in the installation subframe with clamping elements. Make sure that they are seated in an air-tight position in the subframe.

   Clean the air handling unit and ventilation ducts before installing filters above class F9.

3. ▸ Clear dust from parts in front of the filter unit in the airflow direction.

⇨ Filter unit is set up.

6.3.2 Heater/cooler

Media containing glycol

WARNING!

Media that contain glycol pose a health risk.

The media in the heating coil and cooling coil contain glycol, which can lead to serious health problems if it comes into contact with the body, if it is swallowed, or if aerosols are inhaled.

- Avoid contact with media that contain glycol
- Work must only be carried out by an HVAC technician or the *TROX Technical Service*
- Do not eat, drink, or smoke when handling media containing glycol
- Wash hands before breaks and when finishing work
- If you come into contact with media containing glycol, follow the first aid measures on the medium manufacturer's safety data sheet
- When handling media containing glycol, personnel must wear the personal protective equipment specified in the medium manufacturer's safety data sheet

Commissioning the heater/cooler

Personnel:

- HVAC technician

Protective equipment:

- Industrial safety helmet
- Protective clothing
- Hearing protection
- Protective gloves
- Safety shoes

Do not exceed the pressures permitted according to the technical data.

Appropriate measures must be used to protect water-carrying systems against frost. Frost protection can, for example, be achieved by using a glycol/water mixture or by using frost protection equipment.

1. Check that the feed and return are correctly connected.
2. Check that shut-offs and fittings are correctly installed.
3. Flush the system to remove dust and pollution.
4. Open the venting fittings if automatic vents are not installed.
5.

   TROX recommends using a pre-mixed glycol/water mixture. See the order-specific air handling unit data sheet from TROX for the mixture ratio.

   It is important to ensure that the mixture ratio is correct:

   – *Too much glycol can lead to reduced output and*
   – *Too little glycol can lead to frost damage*

   .

   Only use one of the following glycols for the air handling unit:

   – *Propylene glycol*
   – *Ethylene glycol*

   Slowly pour the medium into the heating coil/cooling coil at the lowest point. When filling the system, check that all external and internal screw joints and connections are leak-tight.
6. Ventilate the heating coil/cooling coil by opening the upper spigot and the separate ventilation screw.

   If the heating coil/cooling coil is not properly ventilated, air bubbles can form which impair output.
7. Close open venting fittings.
8. Clean the condensate drip tray and drain.
9. Set up the droplet eliminator.
10. Fill the siphon with water.

NOTICE!

Can cause physical damage.

– Hold up the heating coil/cooling coil thread connections using a suitable tool (e.g. pipe wrench).

11. After commissioning, check the flange screw joints and tighten if necessary.

    ⇨ The heater/cooler is set up.

6.3.3 Multileaf dampers

Moving parts of the multileaf dampers

WARNING!

Danger of crushing due to moving parts!

The closing multileaf damper blades can cause injury to the upper limbs.

– Never reach between the multileaf damper blades
– Only operate multileaf dampers with ducts or safety guards
– Before opening the inspection access openings, switch off the air handling unit and secure against restarting

Setting up multileaf dampers

The air handling unit control must be set in such a way that the fan cannot operate against a closed damper.

TROX will not accept liability for damage resulting from incorrect operation. To prevent damage due to pressure pulses with fire dampers, overpressure dampers should be installed in the system.

TROX cannot guarantee leak-free dampers if the actuators are provided and installed by others.

Powered dampers

Personnel:
- HVAC technician

Protective equipment:
- Protective clothing
- Hearing protection
- Industrial safety helmet
- Protective gloves
- Safety shoes

▸ Adjust the rod in such a way that the angle of rotation is 90° and the dampers reach the end position when closed.

⇨ Powered multileaf dampers are set up.

Coupled dampers (for plate heat exchanger)

Personnel:
- HVAC technician

Protective equipment:
- Protective clothing
- Hearing protection
- Industrial safety helmet
- Protective gloves
- Safety shoes

1. ▸ Check that the connecting rods have a force-locked connection.
2. ▸ Check the rotation direction and the end position of the dampers.
3. ▸ Check that all screw joints and connections are correctly fastened.

⇨ The coupled multileaf dampers are set up.

6.3.4 Rotary heat exchanger

⚠ WARNING!

Incorrect fan operation can cause injury!

Incorrect use, e.g. reaching into rotating parts, can cause serious injuries.

– Never reach into or tamper with the storage mass
– Observe the stopping time: ensure that none of the parts are moving before opening the inspection access openings
– Never operate damaged rotary heat exchangers
– Switch off the air handling unit before working on moving rotary heat exchanger parts and secure the unit against restarting. Wait until all parts have come to a stop.

⚠ WARNING!

Risk of injury caused by hot surfaces!

The storage mass drive motor generates high temperatures. Skin contact with hot surfaces on the drive motor will cause severe skin burns.

– Switch off the air handling unit before working on the rotary heat exchanger and secure the unit against restarting
– After switching off the air handling unit, wait until all surfaces have cooled to the ambient temperature

Aligning the rotary heat exchanger

The storage mass of the rotary heat exchanger is aligned in the production facility. Depending on the installation conditions, the storage mass may need to be realigned, see *Appendix 'Aligning storage mass' on page 49*.

Setting up rotary heat exchangers

Personnel:
- HVAC technician

Protective equipment:
- Protective clothing
- Hearing protection
- Industrial safety helmet
- Protective gloves
- Safety shoes

Limitations of use (temperatures, differential pressure, etc.) must not be exceeded.

1. Check whether the system has been installed correctly.
2. Check that the rotary heat exchanger is intact.
3. Check that the rotor moves freely.

   Follow the operating manual from the rotary heat exchanger manufacturer.

4. Check the rotation direction of the rotor and change the motor controller, if necessary. Follow the operating manual from the rotary heat exchanger manufacturer.

   If a flushing zone is installed, the storage mass must rotate from the extract air to the supply air via the flushing chamber.

5. Check that the control unit functions correctly.
6. Check the drive belt tension.
7. Set up actuator, *'Setting up the actuator' on page 35*.
8. Check that seals are tightly seated and readjust, if necessary.

   During readjustment, check that the rotor turns smoothly and is not blocked. Avoid direct grinding, even under operating pressures. The required starting torques must not be exceeded.

   ⇨ The rotary heat exchanger is set up.

Setting up the actuator

Personnel:
- Skilled qualified electrician

Protective equipment:
- Protective clothing
- Hearing protection
- Industrial safety helmet
- Protective gloves
- Safety shoes

TROX recommends regularly inspecting the drive belt tension within the first 400 operating hours.

1. Open the inspection access panel on the indicated corner of the rotor unit casing.
2. Check that the drive belt has sufficient tension and, if necessary, shorten (*Appendix 'Motor drive for rotary heat exchanger' on page 55*).

Checking the motor

3. Check the motor fastening.

   ⇨ Actuator is set up.

6.3.5 Droplet eliminator

Personnel:
- HVAC technician

Protective equipment:
- Protective clothing
- Industrial safety helmet
- Hearing protection
- Protective gloves
- Safety shoes

The droplet eliminator will only become fully effective after a ramp-up phase of around 4 weeks.

1. Check the installation orientation of the droplet eliminator.
2. Check the airflow velocity over the droplet eliminator (V_{max} 4 m/s).
3. Check and, if necessary, clean the droplet eliminator with water to remove foreign matter and contaminants.

   ⇨ Droplet eliminator is set up.

6.3.6 Plate heat exchanger

Setting up plate heat exchangers

Personnel:

- HVAC technician

Protective equipment:

- Protective clothing
- Industrial safety helmet
- Hearing protection
- Protective gloves
- Safety shoes

NOTICE!

Extreme pressure drops can cause physical damage!

Extreme pressure drops between the supply air and extract air flow can damage the heat exchanger.

– Never exceed the maximum permissible pressure drops (approx. 1000 Pa, depending on unit design)
– Check pressure drops on the pressure switches at the specified intervals

▸ Check and, if necessary, clean the plate heat exchanger to remove foreign matter and contaminants.

⇨ Plate heat exchanger is set up.

6.3.7 Setting up accessories

Personnel:

- Skilled qualified electrician

Protective equipment:

- Industrial safety helmet
- Hearing protection
- Protective gloves
- Protective clothing
- Safety shoes

1. ▸ Set the bus address of the accessories, see *Appendix 'Accessories for X-CUBE compact' on page 120*.
2. ▸ Establish bus communication, see *Appendix 'Accessories for X-CUBE compact' on page 120*.

6.4 Switching on the air handling unit

6.4.1 Before switching on

After transportation, assembly and installation, the following points must be checked before switching on the air handling unit:

- Has the air handling unit been checked for damage?
- Has the air handling unit been checked for air-tightness?
- Have the filters been inserted?
- Are all inspection access openings adjusted and closed?
- Is the supply media compliant with all requirements?
- Is all the safety equipment installed and functional?
- Are all electrical connections connected and fused in accordance with the current country-specific standards?
- Is the heater/cooler connected and filled correctly?
- Is the centrifugal fan set up?
- Are the multileaf dampers set up?
- Is the rotary heat exchanger set up?
- Is the plate heat exchanger set up?

6.4.2 Switching on

Switching on the air handling unit by qualified personnel

The unit must only be switched on by specifically qualified personnel.

Follow the information on switching on the unit in the operating manual.

6.5 Configuring the air handling unit

6.5.1 Setting up X-CUBE controller communication

Personnel:

- HVAC technician

If accessories are installed, read the installation and commissioning manual for accessories before configuring the air handling unit.

A static IP address can be assigned to the X-CUBE controller or it can obtain a dynamic (DHCP) IP address via the network. The factory-specified static IP address is 192.168.1.2.

If the air handling unit is connected directly to the PC using a network cable, a static IP address must be set on the hand-held control. If the air handling unit is integrated in a network, the IP address must be obtained dynamically (DHCP) via the network.

1. Switch on the air handling unit.

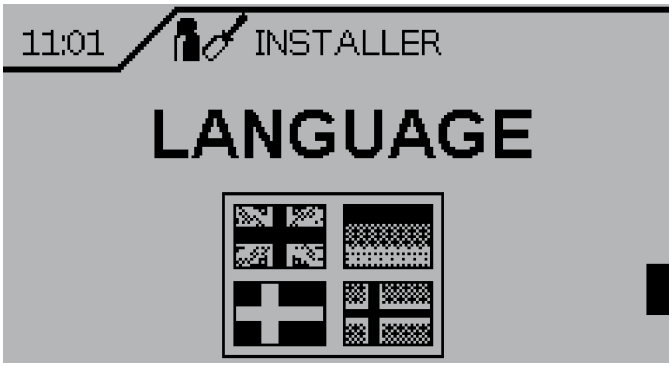

Fig. 35: Selecting language

2. On the hand-held control, call up the *'Technician ➔ Language ➔ Select language'* window.
3. Select the language.

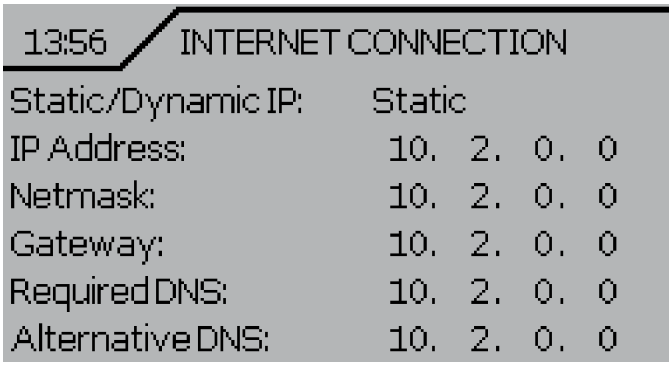

Fig. 36: Internet connection

4. On the hand-held control, call up the *'User ➔ Internet ➔ Internet connection'* window.
5. Set the static IP address or set dynamic assignment of the IP address.
   ⇨ Communication is set up for the X-CUBE controller.

6.5.2 Setting up network communication

Personnel:

- HVAC technician

A network connection must be established with the air handling unit to enable communication with the air handling unit and a PC. The following steps apply to Windows PCs.

1. On the desktop, select *'Start ➔ Control Panel ➔ Network and Internet ➔ Network and Sharing Center'* .

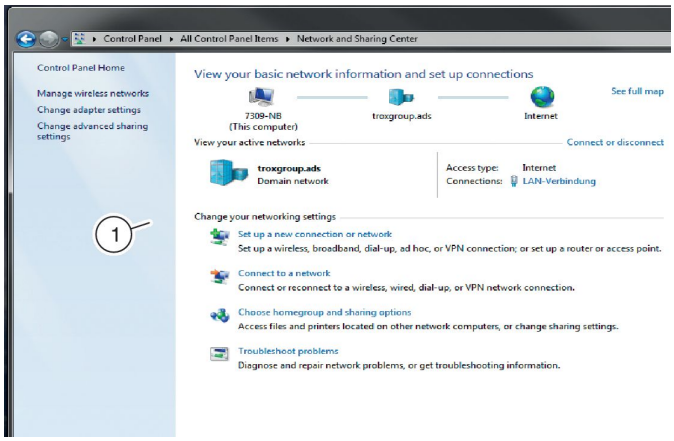

Fig. 37: Setting up a new connection or network

2. Select *'Set up a new connection or network'* (Fig. 37/1).

   ⇨ The *'Set Up a Connection or Network'* window appears.

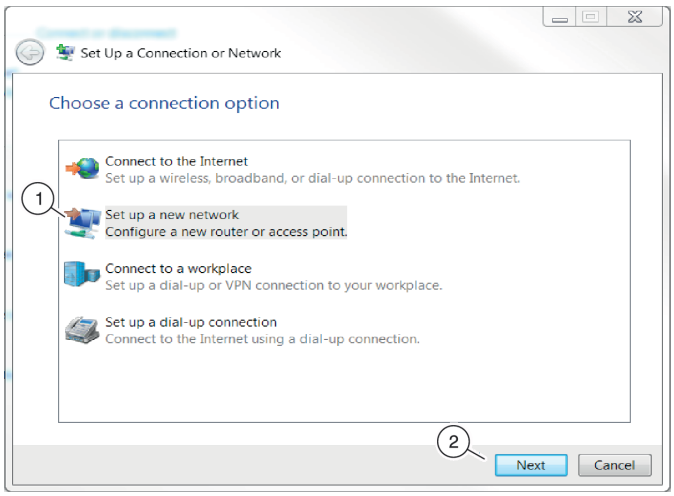

Fig. 38: Setting up a new network

3. Highlight *'Set up a new network'* (Fig. 38/1) and click *'Next'* (Fig. 38/2) to select it.

   ⇨ The PC searches for an access point.

4. Select the air handling unit.

   ⇨ The *'Local Area Connection Status'* window opens.

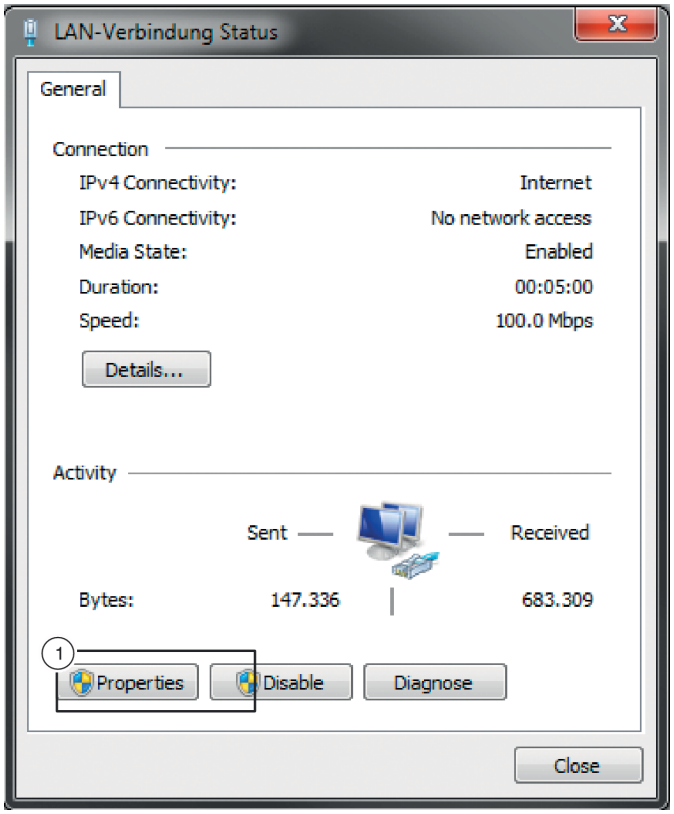

Fig. 39: Local area connection status

5. Select *'Properties'* (Fig. 39/1).

   ⇨ The *'Local Area Connection Properties'* window opens.

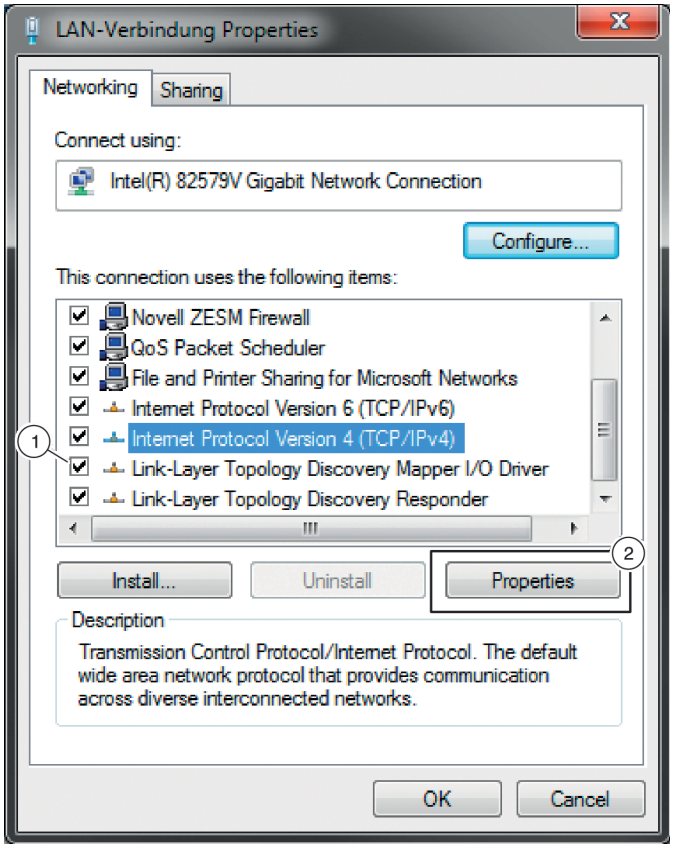

Fig. 40: Local area connection properties

6. ▸ Highlight *'Internet Protocol Version 4 (TCP/IPv4)'* (Fig. 40/1) and select the *'Properties'* (Fig. 40/2) button.

   ⇨ The *'Internet Protocol Version 4 (TCP/IPv4) Properties'* window opens.

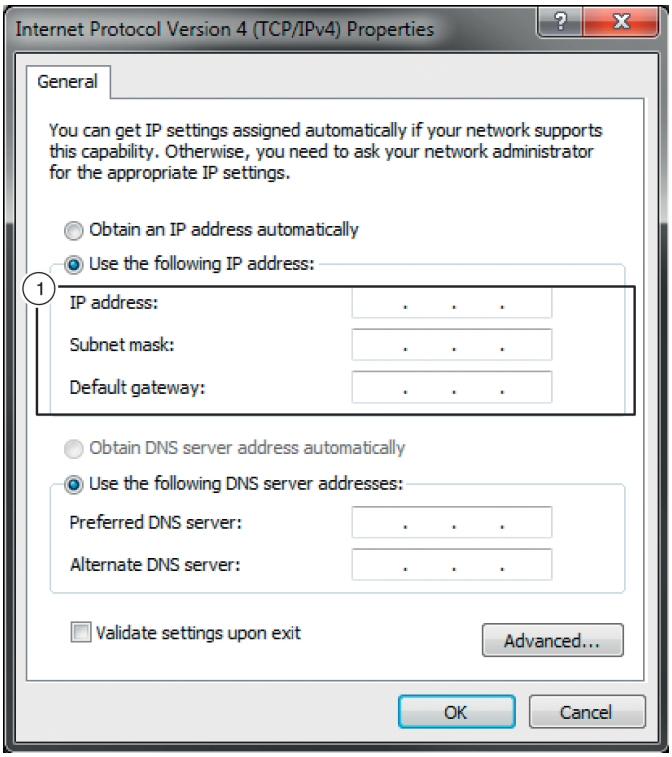

Fig. 41: Internet protocol TM properties

7. ▸ Select the *'Use the following IP address:'* (Fig. 40/1) option, enter the IP address, subnet mask and default gateway and click *'OK'*.

   ⇨ The air handling unit is connected and can be operated via the web browser.

> *Restart the PC if necessary.*

6.6 Logging in to the web server

Personnel:

- HVAC technician

There are three login levels available on the web server. There are different functions for operating, maintaining or configuring the air handling unit available for each level.

Level	User name	Pass-word	Function
User	USER	0001	setpoint value set-tings
Installer	INSTALLE	0022	setpoint value and control settings
Service	SERVICE	0333	configuring

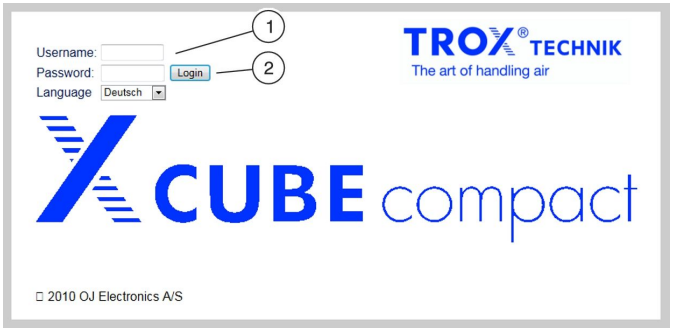

Fig. 42: Logging in to the web server

1. ▸ Enter your user name (Fig. 42/1).
2. ▸ Enter your password.
3. ▸ Select the *'Login'* (Fig. 42/2) button.

   ⇨ The user is logged in to the web server.

7 Removal and disposal

7.1 Safety notes on removal and disposal

Incorrect removal

DANGER!

Danger of death due to incorrect installation!

Incorrect installation can pose health risks, danger of death, and danger to the environment.

- Before beginning the removal process, correctly disconnect all electrical connecting cables
  - The unit must only be disconnected from the power supply by skilled qualified electricians
  - Establish voltage-free state.
- Before beginning the removal process, correctly drain all media
  - Disconnect media lines.
  - Ensure that media are disposed of correctly
- If you have any questions during removal, refer to the assembly instructions in this manual

  Follow component manufacturer documentation
- Removal must only be carried out by trained specialist personnel
- If necessary, use additional personal protective equipment, such as a safety harness, for outside installations

Improper transport

WARNING!

Danger of death if transported improperly!

Danger of death if packages are lifted without the designated transport equipment and fastenings or if they fall during transportation.

- Transport packages in operating position only
- Never stop under suspended loads
- Never transport additional loads with the package
- Only use the proper attachment points
- Never directly or indirectly load supply or outlet connections
- Only use suitable and approved hoisting devices and lifting gear with sufficient load-bearing capacity
- Never knot ropes and chains or place them on sharp edges
- Only load transport equipment vertically
- Ensure that the ropes, belts, and chains do not twist
- Only lift packages using correctly assembled and mechanically secured transport equipment and fastenings
- Fix and secure all doors, dampers, and panels
- Carefully transport the packages without any jerky movements and lower them when leaving the workplace
- Transport slings are designed for single use only and not for permanent unit attachment
- Transport tubes are designed for single use only and not for permanent unit attachment
- Observe information on transport:
  Chapter 3.3 'Transporting packages' on page 11

Eccentric centre of gravity

WARNING!

Falling or tilting packages may cause injury!

Packages may have an eccentric centre of gravity. If they are incorrectly attached, packages may tilt and fall. Falling or tilting packages can cause serious injuries.

- When transporting packages by crane, attach the crane hook so that it is located above the centre of gravity of the packages
- Lift the packages carefully and watch whether they tilt. If required, change attachment.

Sharp edges, sharp corners and thin sheet metal parts

CAUTION!

Danger of injury at sharp edges, sharp corners and thin sheet metal parts!

Sharp edges, sharp corners and thin sheet metal parts of the plate and rotary heat exchangers or of the cooling or heating coil may cause cuts or grazes.

– Be careful when working on these components.
– Wear protective gloves, safety shoes and a hard hat.

ENVIRONMENT!

Incorrect disposal can be dangerous for the environment.

Disposing of components incorrectly can endanger the environment.

– Have electronic scraps, electrical components, as well as cooling media, freezing agents, compressor oils, and lubricants disposed of by an approved specialist disposal company.

7.2 Removal

Personnel:

- HVAC technician
- Skilled qualified electrician

Protective equipment:

- Industrial safety helmet
- Protective clothing
- Hearing protection
- Protective gloves
- Safety shoes

1. ▸ Disconnect electrical connecting cables.

   Establish voltage-free state.

2. ▸ Empty media.

   Dispose of media correctly.

3. ▸ Disconnect media lines.

4. ▸ Loosen unit connections from components to the connection points (module connectors and base frame connectors).

5. ▸ Remove individual unit components.

   Properly remove the unit components.

7.3 Disposal

If no return or disposal agreement is in place, any disassembled components should be disposed of by an approved specialist disposal company.

Components that are no longer required should be recycled:

- Scrap the metals
- Take plastic elements to be recycled
- Sort leftover components and waste materials by material properties and dispose of them

Electrical and electronic components

Electrical and electronic components can contain materials and substances that are hazardous to health and the environment and which must not get into household and commercial waste.

As electrical and electronic components may also contain recyclables (e.g. precious metals), they must be provided for recycling and/or disposal by a specialist disposal company.

Chemicals

Chemicals (solvents, cleaning agents, media, etc.) can have various effects on the air, soil, water, and human health. In some cases, valuable substances can be extracted from them.

Chemicals must therefore not get into the air, soil, sewage system, surface water, or ground water.

Commission a designated specialist disposal company for the recovery or removal of chemicals.

8 FAQ

No.	Question	Answer
1	How should the electrical connections be established between the accessory modules (e.g. heating coil module, heating coil/cooling coil module, digital control panel) and the I&C box (CB-1 or CB-2) and X-CUBE controller?	Information about commissioning an accessory module and the corresponding system diagrams can be found in the "Installation and commissioning manual – accessories for X-CUBE compact" Chapter 5 Connection diagrams. (*Appendix 'Accessories for X-CUBE compact' on page 120*)
2	How is bus communication established between the accessory modules (e.g. heating coil module, heating coil/cooling coil module) and the air handling unit?	For information about commissioning an accessory module, see the "Installation and commissioning manual – accessories for X-CUBE compact" Chapter 3 Establishing bus communication and Chapter 2 Setting the bus address of the accessories.
3	Where can you find technical data about the air handling unit with regard to its dimensions, weight specifications, divisibility and technical output data?	All technical data relating to the unit can be found in the "Operating manual – X-CUBE compact air handling units" in Chapter 10 Technical data. (*X-CUBE compact operating manual*)
4	Where must the PT1000 temperature sensors be connected to the X-CUBE controller?	The PT1000 indoor temperature sensor must be connected to the X2/13/14 terminals on the X-CUBE control Master and the PT1000 outdoor temperature sensor must be connected to the X2/15/16 terminals. See circuit diagrams in the appendix. ■ (*Appendix 'Circuit diagram tray 230 V AC-PHE' on page 64*) ■ (*Appendix 'Circuit diagram tray 230 V AC-RHE' on page 78*) ■ (*Appendix 'Circuit diagram tray 400 V AC-PHE' on page 92*) ■ (*Appendix 'Circuit diagram tray 400 V AC-RHE' on page 106*)
5	Where must the analogue XCC-CD-RA and the digital XCC-CD-RD control panel be connected to the X-CUBE controller?	The two control panels are connected according to the connection diagrams in the "Installation and commissioning manual – accessories for X-CUBE compact" Chapter 5.1 XCC-CD-RA and Chapter 5.2 XCC-CD-RD. Information about cables and settings can be found in the connection diagrams. The maximum cable length of 30 m should not be exceeded. (*Appendix 'Accessories for X-CUBE compact' on page 120*)
6	How is the correct installation of the digital (XCC-CD-RD) control panel on the X-CUBE controller checked and how is communication with the control panel checked?	The digital control panel is connected according to the connection diagrams in the "Installation and commissioning manual – accessories for X-CUBE compact" Chapter 5.2 XCC-CD-RD. (*Appendix 'Accessories for X-CUBE compact' on page 120*) If the unit is connected correctly, the time and date are shown on the display of the digital control panel. If this is not the case, check whether the RJ12 Modbus cable of the control panel is inserted in the RJ12 terminal socket port A. If the RJ12 Modbus cable is inserted in port B or C, insert it in port A.

No.	Question	Answer
7	Where and how must the fire damper be connected to the X-CUBE controller? What is the maximum number of fire dampers that can be connected?	The fire damper must be connected to the X2/1/2 terminals on the X-CUBE control Master with a normally closed contact. A maximum of 300 fire dampers can be connected in series with a normally closed contact. For information on connecting the fire damper, see the relevant electrical circuit diagram. ■ (↯ *Appendix 'Circuit diagram tray 230 V AC-PHE' on page 64*) ■ (↯ *Appendix 'Circuit diagram tray 230 V AC-RHE' on page 78*) ■ (↯ *Appendix 'Circuit diagram tray 400 V AC-PHE' on page 92*) ■ (↯ *Appendix 'Circuit diagram tray 400 V AC-RHE' on page 106*) When one or more fire dampers are triggered, the system stops operating. Automatic unlocking following the triggering of one or more fire dampers is not guaranteed by the X-CUBE controller. The system must be unlocked manually using the handheld control.
8	How many motorised fire dampers can be connected to the compact unit?	No motorised fire dampers can be connected to the air handling unit. We recommend using a TNC-Easy module for versions with motorised fire dampers. Up to 12 motorised fire dampers can be connected using the TNC-Easy module. For more information, contact the TROX sales representative.
9	How is the accessory module installed directly on the air handling unit and how is the accessory module offset from the air handling unit?	The "Transportation and installation manual – X-CUBE compact air handling unit" describes how to install the accessory module on the air handling unit in the "Installing accessories" chapter. See (↯ *Chapter 4.4.4 'Installing accessories' on page 23*). If it is not possible to install the accessory module on the air handling unit due to the space available in the installation room. See (↯ *Chapter 4.4.4 'Installing accessories' on page 23*).
10	Can the plate heat exchanger be removed to make it easier to move the unit into the installation room?	The proper procedure for removing the plate heat exchanger is described in the "Operating manual – X-CUBE compact air handling unit" in the chapter "Changing the actuator on the bypass damper for units with a plate heat exchanger". See (↯ *X-CUBE compact operating manual*).
11	Is a separate supply voltage required for the accessory modules and for the I&C modules (CB-1 or CB-2)?	Yes, a supply voltage of 230 VAC is required.

No.	Question	Answer
12	What does the error message "Contactor is sticking" mean and how can the problem be resolved?	This error message only appears when using an accessory module. When the accessory module is supplied with an I&C module (CB-1 or CB-2), the address 8 is set on the extension module ex works. The bus address in the I&C module must be checked and the correct bus communication settings must be made. See Chapters 2 and 3 of the "Installation and commissioning manual – accessories for X-CUBE compact" (*Appendix 'Accessories for X-CUBE compact' on page 120*).
13	Which communication interfaces are available on the air handling unit?	TCP/IP BACnet, Modbus and Modbus RTU communication interfaces are available. A LON communication interface can be established using an additional module (subject to charge).

9 Index

A

Adjusting multileaf dampers ... 33
AHU components
- Assembling in the outdoor area ... 20
- Attaching base frame plugs ... 20
- Attaching sealing tape ... 20
- Attaching U-bar ... 20
- Check seals ... 18
- Individually assembling ... 21
- Installing ducts ... 22
- Setting up ... 19

Air handling unit
- Commissioning ... 31
- Connecting to the mains ... 29

Attaching base frame plugs ... 20
Attaching sealing tape ... 20
Attaching U-bar ... 20

C

Calculating siphon height ... 27
Changing operating side ... 26
Connecting siphon ... 27
Cooling coil
- Commissioning ... 33
- Installing ... 28

Copyright ... 3

D

Defects liability ... 3
Delivering the air handling unit ... 10
Disposing of packaging ... 15
Droplet eliminator ... 35

E

Electrical connection ... 29
Environmental protection
- Chemicals ... 41
- Electrical and electronic components ... 41

H

Heating coil
- Commissioning ... 33
- Installing ... 28

I

Improper transport ... 11
Initial commissioning ... 31
- Droplet eliminator ... 35
- Filter unit ... 32
- Heating coil/cooling coil ... 33
- Multileaf dampers ... 33
- Plate heat exchanger ... 36
- Rotary heat exchanger ... 35
- Switching on ... 36

Inserting the filters ... 32
Installation
- Calculating siphon height ... 27
- Connecting heater/cooler ... 28
- Connecting siphon ... 27
- Connecting to central building management system ... 30
- Connecting to the network ... 30

Installation and assembly ... 16
Installing
- Accessory module ... 23
- AHU components in the outdoor area ... 20
- Assembling individual AHU components ... 21
- Base frame plugs ... 20
- Ducts ... 22
- Noise insulating connectors ... 22
- Roof installation for accessories ... 24
- U-bar ... 20

Installing ducts ... 22

L

Limitation of liability ... 3
Logging in to the web server ... 39

O

Operator ... 8
Operator's obligations ... 8
Other applicable documentation ... 3

P

Packages
- Storing ... 15
- Transporting ... 12
- Unpacking ... 15

Personnel ... 8
Plate heat exchanger ... 36

Q

Qualification ... 8

R

Removal and disposal ... 41
Removing
- Noise insulating connectors ... 22

Requirements
- Initial commissioning ... 31
- Installation ... 19, 25
- Switching on ... 36

Requirements for the installation location
Foundations for outdoor installation ... 17
Indoor installation foundation ... 17
Installation room ... 16, 17
Rotary heat exchanger ... 35
Setting up the actuator ... 35
S
Setting up network communication ... 38
Setting up X-CUBE controller communication ... 37
Sound insulation ... 18
Storing ... 15
Switching on ... 36
Symbols ... 4
On the packaging ... 10
Transport ... 10
T
Technical service ... 3
Transport
Checking deliveries ... 10
Crane and beckets/ring nuts ... 13
Crane and transport tubes ... 12
Delivery ... 10
Forklift or pallet truck ... 12
Units for indoor installation ... 13
Transport damage ... 10
U
Unpacking ... 15
X
X-CUBE compact components ... 6
X-CUBE compact elements ... 6

Appendix

A Aligning storage mass

KLINGENBURG

Montageanleitung
Mounting Instructions

Ausrichtung der Speichermasse
Adjustment of storage mass

Um die Speichermasse auf der Antriebswelle zu justieren, müssen auf beiden Seiten des Rotors die Staubdeckel entfernt werden.

To reposition the the matrix on the drive shaft, on both sides of the rotor the hub caps have to be removed.

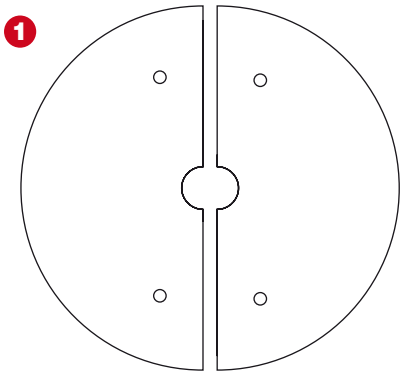

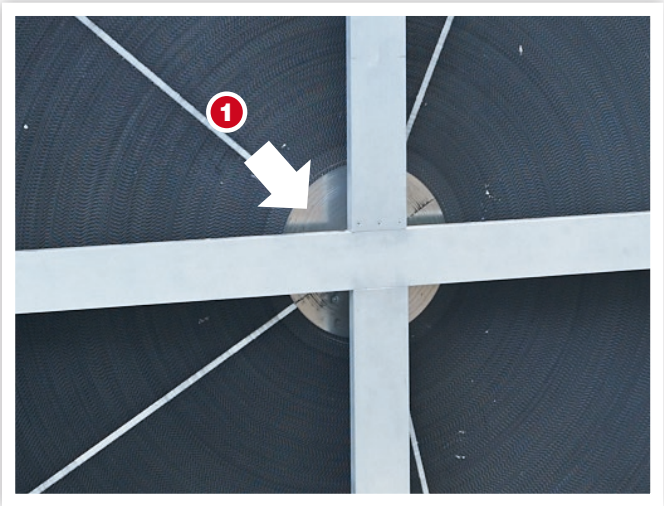

Der Staubdeckel besteht aus zwei Teilen und ist mit je 2 Schrauben befestigt, welche mit einem Imbusschlüssel (Größe 2,5) zu lösen sind.

The hub cap consists of two parts and is fixed with 2 allen screws per part which need a 2.5 mm allen key.

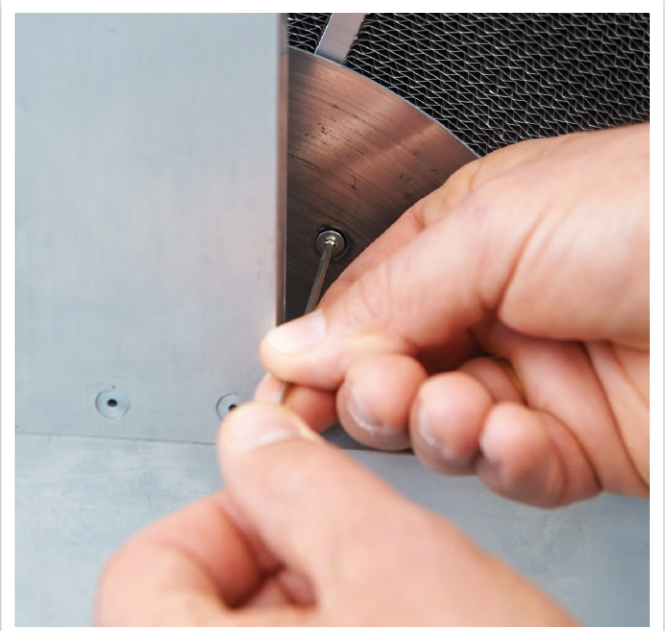

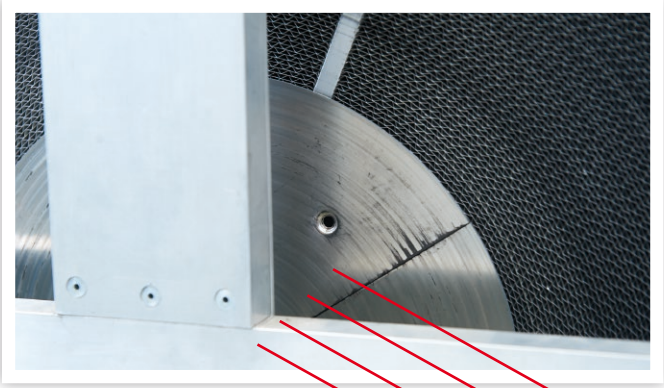

Dazu alle 4 Schrauben lösen.

For this, loosen all 4 screws.

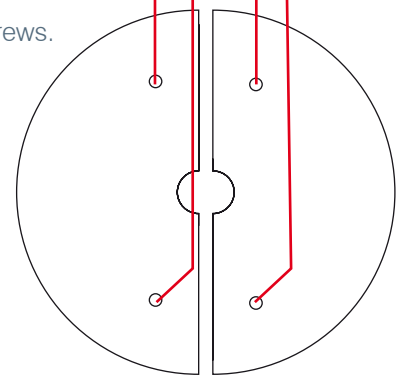

Die beiden Stauddeckelteile entfernen. Der Lagerbereich liegt nun offen. Dieser Vorgang ist auf der gegenüberliegenden Seite des Rotors zu wiederholen.

Remove both parts of the hub cap. The bearings are now accessible. Repeat this procedure on the opposite side of the rotor.

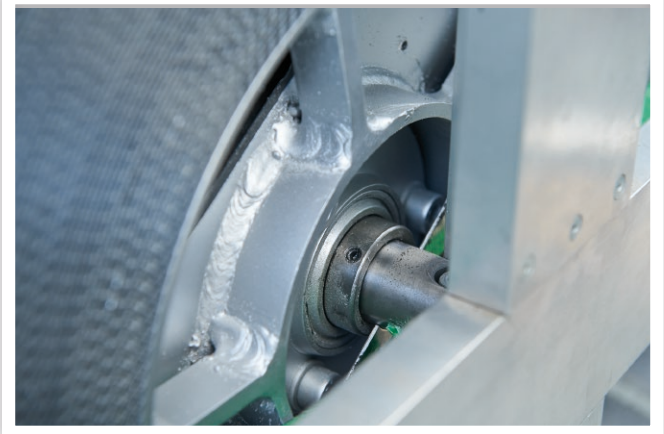

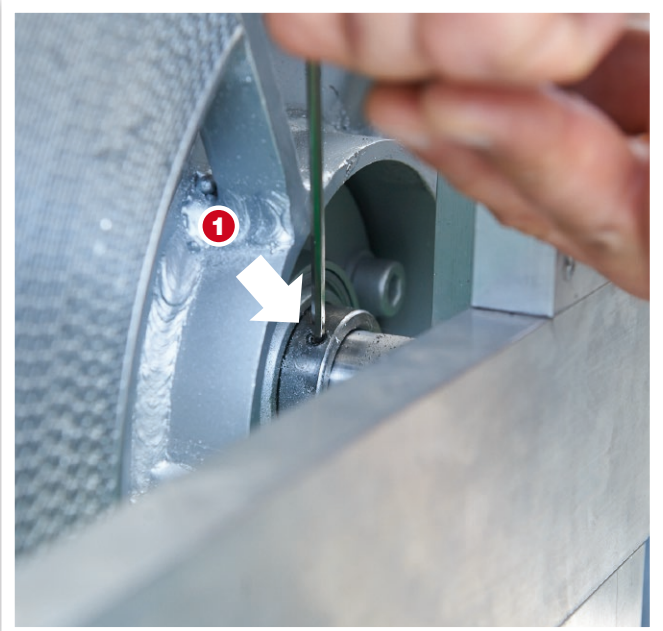

Beide Mardenschrauben (1) und (2) am Lager lösen. Dieses auch auf der gegenüberliegenden Seite des Rotors wiederholen.

Loosen both set screws, (1) and (2). Repeat this procedure on the opposite side of the rotor.

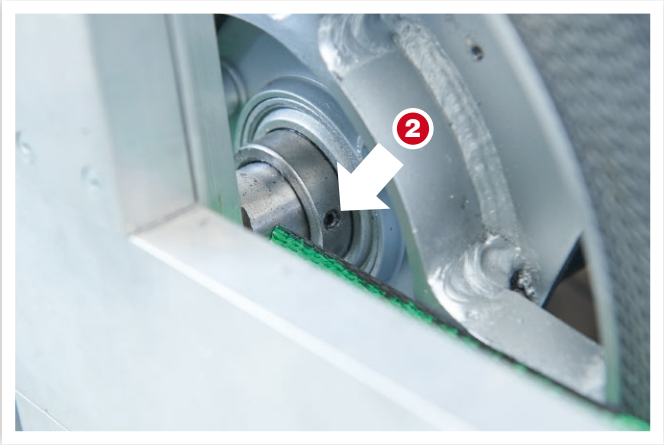

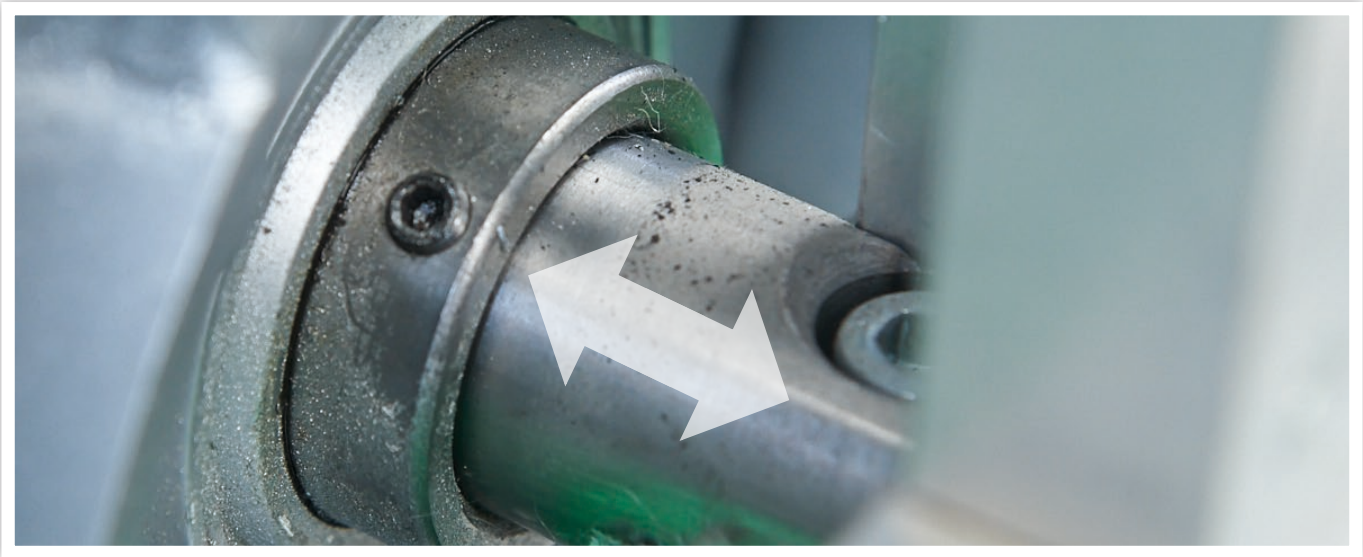

Nun kann die Speichermasse auf der Welle entsprechend justiert werden. Lässt die Speichermasse sich nicht bewegen, kann diese vorsichtig mit leichten Schlägen gelöst werden. Verwenden Sie dazu ein Holzkant. Nach erfolgreicher Justierung sind auf beiden Seiten des Rotors die Lagerschrauben anzuziehen und die Staubdeckel wieder zu anzubringen.

Now the matrix can be moved on the shaft. If not, the matrix may be carefully released with light blows. Use a square timber. After successful repositioning, re-apply bearing screws and hub cap.

Klingenburg GmbH
Boystraße 115
45968 Gladbeck
GERMANY
Tel. +49 (0) 20 43 / 96 36 - 0
Fax +49 (0) 20 43 / 7 23 62
e-mail: klingenburg@klingenburg.de
web: www.klingenburg.de

Klingenburg International sp. z o.o.
ul. Metalowców 5
58-100 Swidnica
POLAND
Tel.: +48 (0) 74 / 851 54 00
Fax: +48 (0) 74 / 851 54 01
e-mail: klingenburg@klingenburg.pl
web: www.klingenburg.pl

Klingenburg USA, LLC
503 Old Thomasville Road
High Point, NC 27260
USA
Tel.: +1 -336-884-5050
Fax: +1 -336-884-5058
e-mail: info@klingenburg-usa.com
web: www.klingenburg-usa.com

Klingenburg Shanghai
Representative Office
Room 24/P Jinsui Mansion
No. 379 Pudong South Road
Shanghai
P.R. CHINA
Tel.: +86 (0) 21 / 68 86 92 51
Fax: +86 (0) 21 / 68 86 99 31
e-mail: klingenburg@klingenburg.cn
web: www.klingenburg.cn

B Motor drive for rotary heat exchanger

KLINGENBURG

Assembly instructions

Belt Drive for Rotary Heat Exchangers

Round Belting

Preparation

Length of the drive belt:
Circumference of the storage mass + 20 mm:
(diameter of the storage mass x 3.14) + 20 mm

Fix the loose round belt to the circumference of the storage mass.

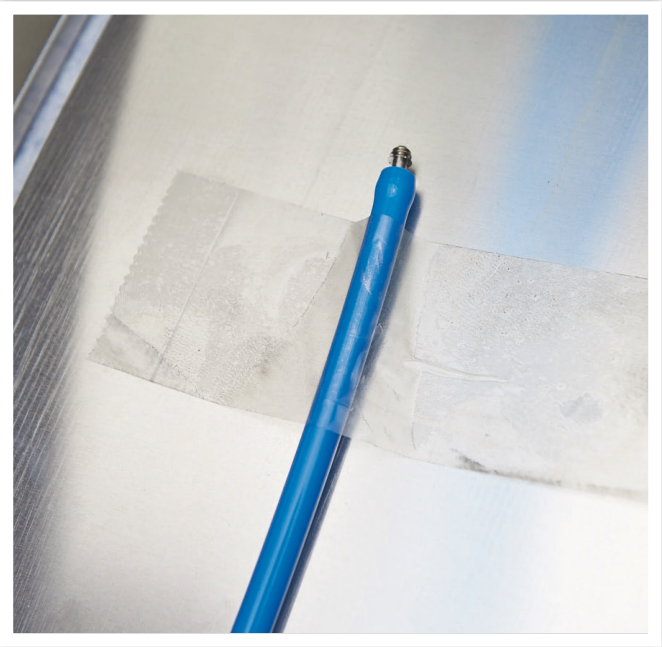

Turn the storage mass by hand, thus tightening the drive belt.

Connect the ends of the round belt to the plug-in connector.

Completely sealed drive belt.

Check the tension of the drive belt.

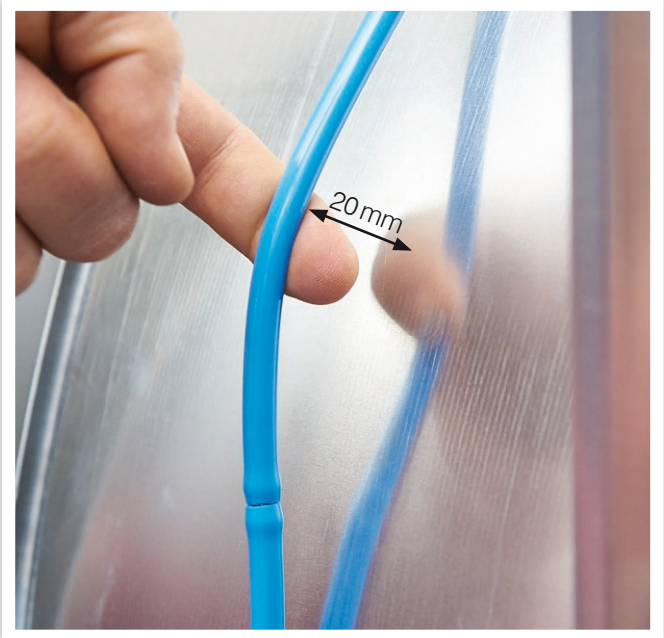

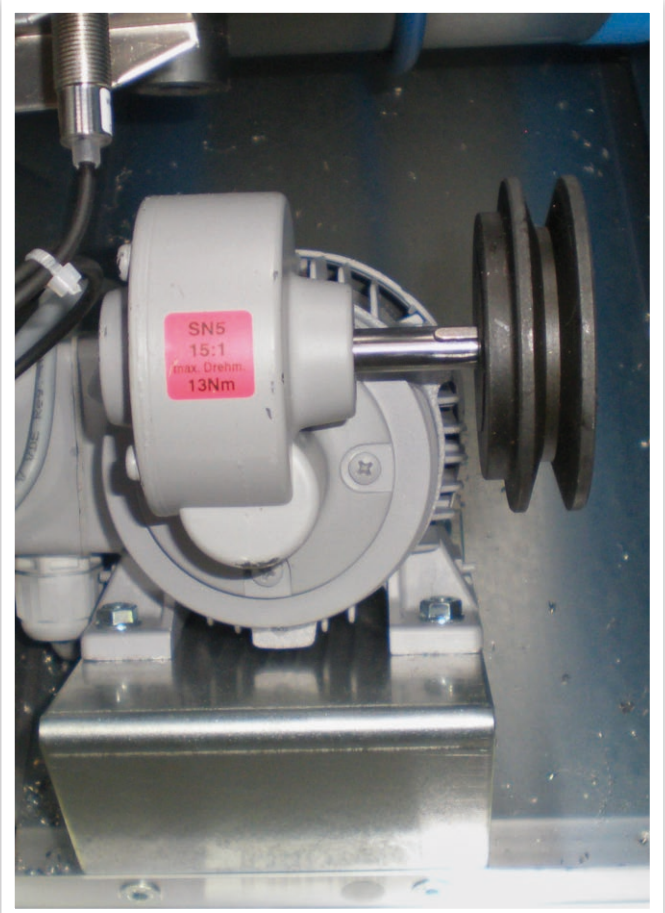

Connect the motor belt to the motor's belt pulley..

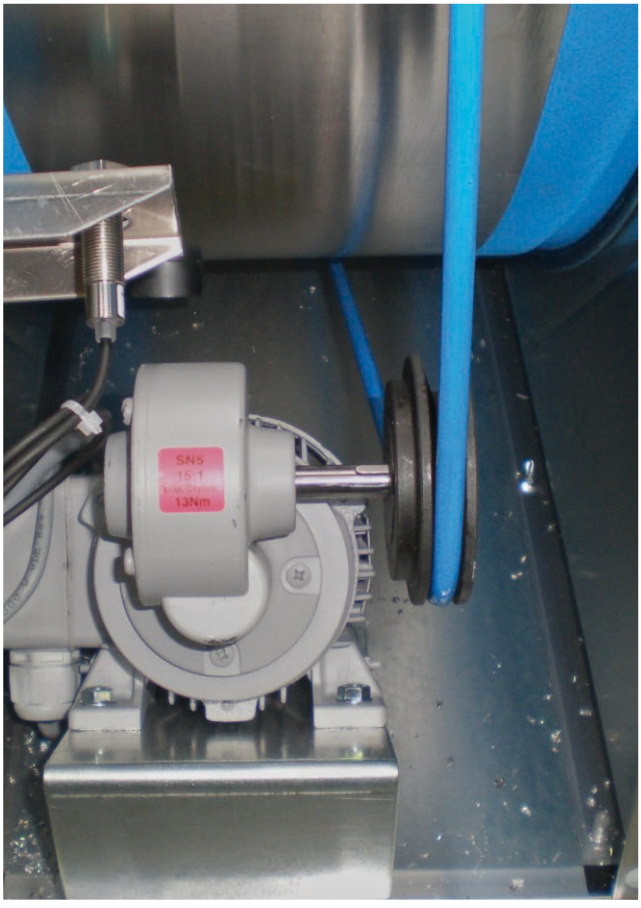

The tension of the drive belt must be checked after 400 operating hours (see page 3) and, if necessary, readjusted by shortening.

Note

C Anti-frost heating for siphons

INSTALLATION INSTRUCTIONS

ANTIFREEZE HEATING for siphons (FSH)

Item No.: 24 (suction side, FSH-S)
Item No.: 25 (pressure side, FSH-D)

The antifreeze heating has been especially developed for the use in all common suction and pressure side type siphons with 1½" connection for AH units.

Description

In general the antifreeze heating consists of a flexible self-regulating and automatic power-limiting heating cable which is led through the siphon and energized automatically by a variably adjustable thermostat as soon as the set temperature is fallen below.
Heating the cable prevents the siphon from freezing.

- For universal use in all 1½" siphons
- Easy retrofit
- Preassembled

Maintenance

The heating cable and the connection box must be checked in regular intervals for mechanical damages, and the electrical protection and function of the thermostat for their proper functioning.
The siphon should be checked for contamination at least twice a year and, if the air is heavily polluted (e.g. exhaust air from the kitchen), more frequently. It should be cleaned, if necessary.

Installation

Before installing the antifreeze heating (FSH) in suction-side siphons just remove the 1½" end cap marked "A" first; in pressure-side siphons the 90° elbow must be replaced by the supplied 1½" T-piece.

Then push the flexible heating cable into the direction of the arrow into the siphon (Fig. 2).

It can be necessary in the process to separate the siphon at the screwings marked "B" because the somewhat stiff point of the heating cable sticks there easily, and so it can be pulled through easily from the other side.

After the antifreeze heating has been screwed using the preassembled union nut the tightness of all screwed connections of the siphon must be checked.

Before pressure-side siphons can be taken into operation again after having been assembled they must be refilled with water!

They can be refilled through the newly inserted T-piece which must be closed afterwards using the previously removed end cap "A".

For suction-side siphons particular attention has to be paid that the ball of the non-return valve is not pushed up by the heating cable because otherwise the function of the siphon cannot be guaranteed.

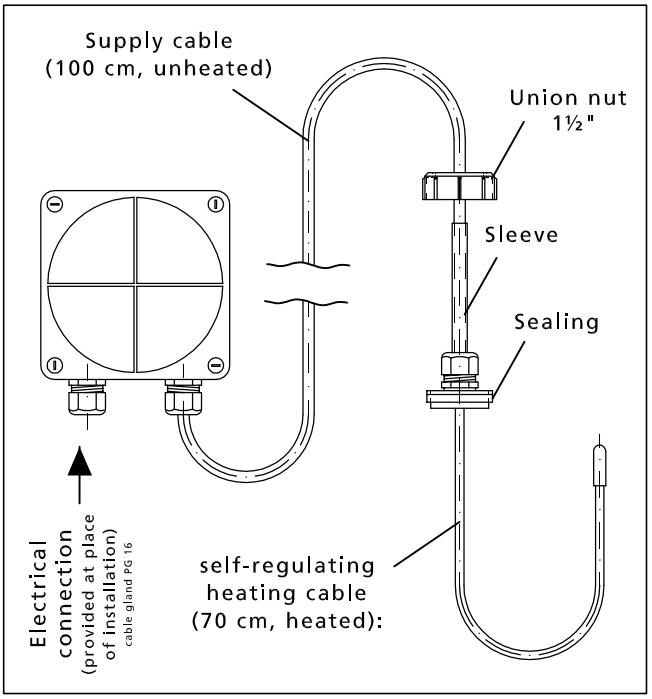

Fig. 1

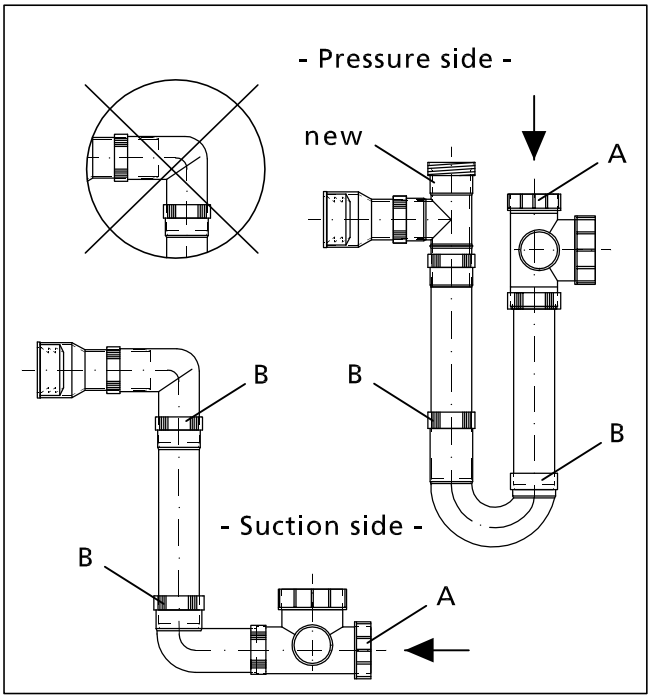

Fig. 2

INSTALLATION INSTRUCTIONS

ANTIFREEZE HEATING for siphons (FSH)

Item No.: 24 (suction side, FSH-S)
Item No.: 25 (pressure side, FSH-D)

Technical data

- Including connection box (IP 67) with integrated antifreeze thermostat for installation in the immediate environment of the siphon
- Completely equipped with clamps for an easy connection to the existing electrical supply (3 x 1.5mm²), 230 V UPS, max. 10 A
- Electrical protection by use of a 30 mA residual-current-operated circuit-breaker (r.c.c.b.) provided by the customer
- Self-regulating and power-limiting heating cable (70 cm, heated up to the connecting sleeve)
- Power: 19 W/m (at +10°C) and 30 W/m (at -25°C)
- Protection class I, model with protective conductor
- Completely watertight in the heated area, from connecting sleeve
- Supply cable IP 54 (100 cm, unheated)
- Admissible operating temperature -30°C to +55°C
- Thermostat preset to +15°C
- Hysteresis (switching difference): 6K ± 4K

Example:	required minimum temperature	5°C
	Set point	15°C
Resulting from:	required minimum temperature	5°C +
	maximum hysteresis 10K (6K + 4K)	

Safety instructions

All safety and accident prevention regulations as well as the guidelines and standards of the country where the installation is carried out must be observed for installation and commissioning. Apart from that the VDE regulations, in particular VDE 0100 and VDE 0721, Part 1 and Part 2 A3 as well as VDE 0254, have to be observed for the installation of the antifreeze heating. The antifreeze heating must only be installed by an authorised specialist. The electrical connection must only be carried out by an electrician in accordance with the electrical regulations.

Modifications to the heating cable are not allowed.

Damages at the heating cable can cause the ingress of humidity and dirt as well as arcing and a fire in the entire system. A heating cable damaged by fire can cause further fire damage when being switched on. Therefore such a heating cable must be taken out of operation immediately.

Intended use

Antifreeze heating for siphons for VAC plants. Assembly and connection must be carried out according to these instructions. Any use other than that which is intended shall not be allowed.

Instructions for the electrical connection

The heating cable of the antifreeze heating must never be shortened, not even on the PTC thermistor side. Excess cable lengths of the heating cable are to be led through the outlet in the condensate trough (necessary for example for shortened siphons). The heating cable is not to be fastened, but just inserted into the siphon and fixed with the screwing in such a way that the connecting sleeve is completely outside the siphon. The heating cable must not be brought into contact with sharp edges and be protected from mechanical damage.
The heating cable must not be crossed or touched anywhere. The heating cable is to be laid in such a way that no heat accumulation will be caused. The heating cable must not be led above or through combustible materials. The electrical protection and the protective measures must have been provided on the installation side for which the use of a 30 mA residual-current-operated circuit-breaker (r.c.c.b.) is mandatory. The exclusive use of miniature circuit breakers may not be enough to prevent the progression of arcs and can provide a fire hazard.
The heating cable of the antifreeze heating must be operated exclusively from the provided connection box with the built-in antifreeze thermostat to ensure that an operation is impossible at ambient temperatures > +5°C. An insulation test is required before the heating is taken into operation.
Pipes used for cable laying must be included in the protective measures (grounding of pipes).

The circuit diagram is available as a free download on our homepage.

Repair

A damaged heating cable must never be repaired but be replaced by a new one.

Instructions for connection and installation

The connection box should be easily accessible but protected from mechanical damage.
It should always be installed in such a way that the cable glands do not point upwards and the lid can be removed. The heating cable of the antifreeze heating must be laid between the connection box and the entry into the siphon in such a way that any mechanical damage will be prevented. No dragging is allowed at the heating cable gland and at the siphon intake.

KLIMA-KOMPONENTEN-KÜCH GMBH

Apfelweg 2 • D-50259 Pulheim-Stommeln • Tel. +49 (0) 22 38 / 92 26 60 • Fax +49 (0) 22 38 / 14 08 07
e-mail: info@klima-kuech.com • web: www.klima-kuech.com • www.kugelsiphon.eu

Vers.: FSH-KKK 1.9 EN by JJ

D Circuit diagram tray 230 V AC-PHE

TROX® TECHNIK
The art of handling air

TROX GmbH

Heinrich-Trox-Platz
47504 Neukirchen-Vluyn
E-Mail: trox@trox.de, Internet: www.trox.de

Customer :
Type : drawer MSR 230VAC X-Cube C/R (L)/P/1230/1800
Project name :

Manufacturer (Firm) : TROX
File name (\EPLAN4\P)
Project name : X-CUBE 230PE

:
:
:
:

Index. 00-11/15

Created on : 10.10.12 by : JK
Processed on : 17.11.15 by : JK

Highest Page No. : 9
No. of pages : 13

Page overview

ESSJ001E

Page	Designation	Additional field	Date	Revisor
0.1	cover page		24.07.13	JK
0.2	page overview		24.07.13	JK
0.3	drawer design		24.07.13	JK
1	main supply		24.07.13	JK
2	Cable-Adapter		24.07.13	JK
3	X-Cube control Master		24.07.13	JK
3.1	X-Cube control Master example sample-wiring		24.07.13	JK
4	X-Cube I/O FAN Modul/ fresh air ventilator		24.07.13	JK
5	X-Cube I/O FAN Modul/ extracted air ventilator		24.07.13	JK
6	terminal X1		24.07.13	JK
7	terminal X2		24.07.13	JK
8	bill of materials part 1		24.07.13	JK
9	bill of materials part 2		24.07.13	JK

			Date	12.10.12	drawer MSR 230AC	CUBE compact	page overview	draw.-No.: 12-1003
			Editor	JK	X-Cube C/R (L)/P/1230/1800			
			Tested	17.11.15				P. 0.2
Changes	Date	Name	Norm		Original	Sub.f.	Sub.b.	9 P.

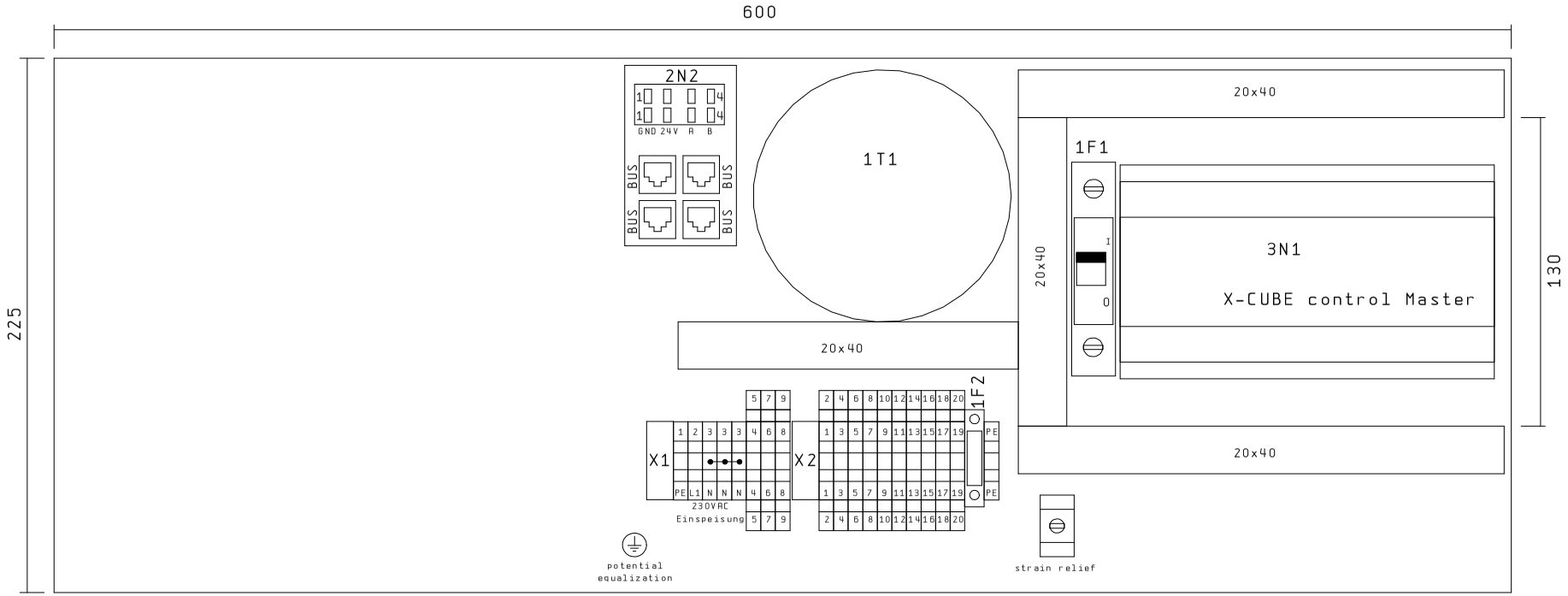

0.2

1

			Date	12.10.12	drawer MSR 230AC		drawer design	draw.-No.: 12-1003	=
			Editor	JK	X-Cube C/R (L)/P/1230/1800				+
			Tested	17.11.15					P. 0.3
Changes	Date	Name	Norm		Original	Sub. f.	Sub. b.		9 P.

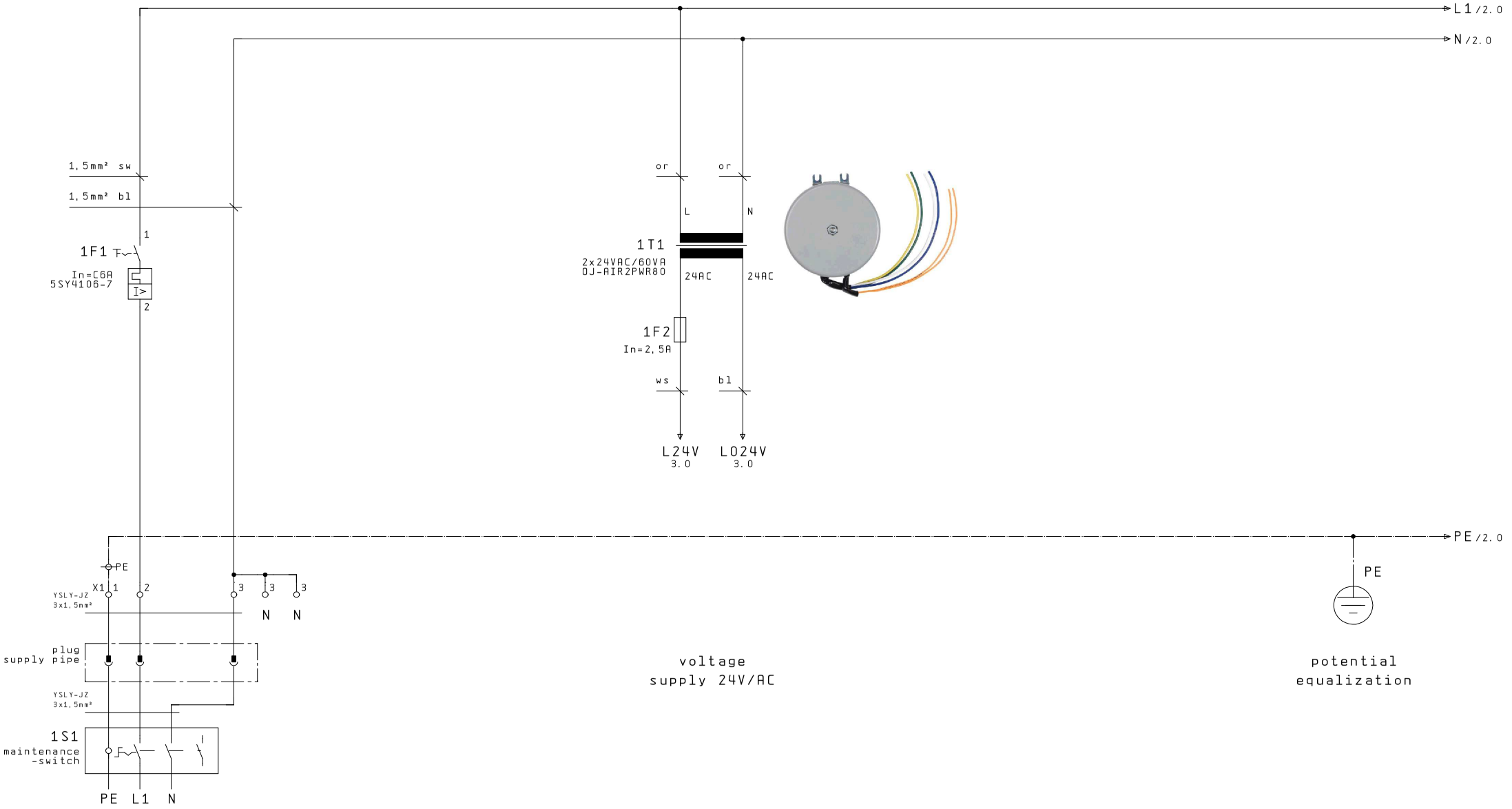

			Date	12.10.12	drawer MSR 230AC	CUBE compact	main supply	draw.-No.: 12-1003
			Editor	JK	X-Cube C/R (L)/P/1230/1800			
			Tested	17.11.15				P. 1
Changes	Date	Name	Norm		Original	Sub. f.	Sub. b.	9 P.

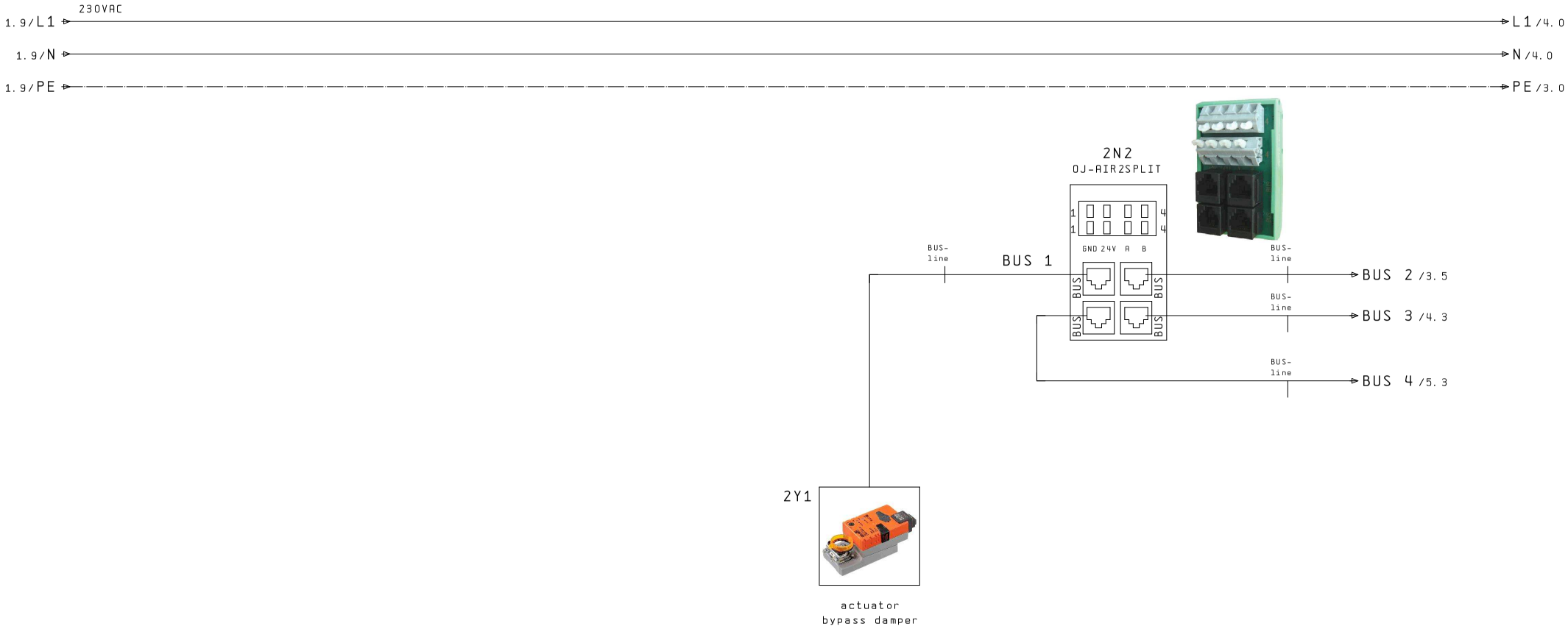

			Date	12.10.12	drawer MSR 230AC		Cable-Adapter	draw.-No.: 12-1003	=
			Editor	JK	X-Cube C/R (L)/P/1230/1800				+
			Tested	17.11.15					P. 2
Changes	Date	Name	Norm		Original	Sub. f.	Sub. b.		9 P.

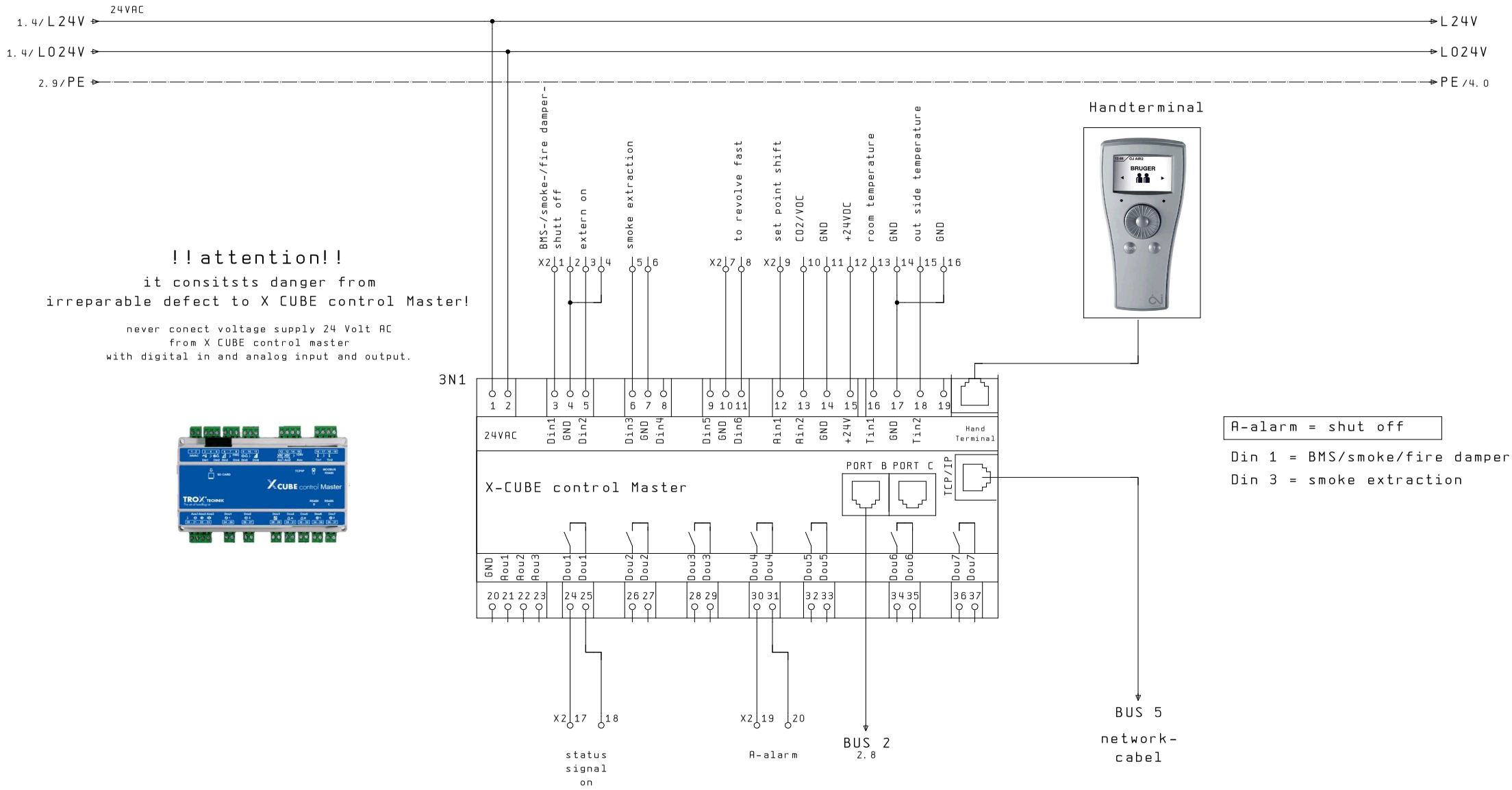

2

3.1

			Date	12.10.12	drawer MSR 230AC	X-CUBE compact	X-Cube control Master	draw.-No.: 12-1003
			Editor	JK	X-Cube C/R (L)/P/1230/1800			
			Tested	17.11.15				P. 3
Changes	Date	Name	Norm		Original	Sub. f.	Sub. b.	9 P.

example
sample-wiring

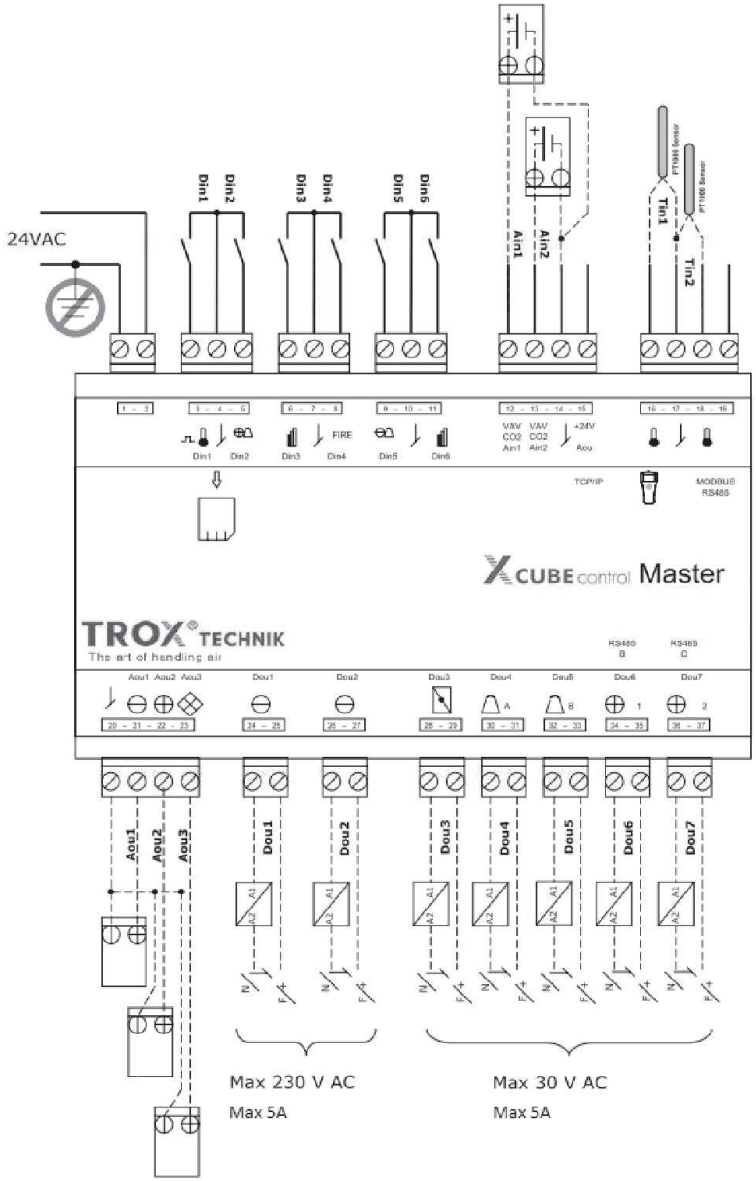

digital in

Din 1-6 to be
potential free connected

digital out

7-potential free out put
Dou 1&2 max. 230V/AC/DC max. 5A
Dou 3-7 max. 30V/AC/DC max. 5A

analog in

Ain 1&2 signal input range 0-10V
voltage supply 24VDC for
aktive sensor terminal 14 (GND)
terminal 15 (+24VDC)

analog out

Aou 1-3 signal out range 0-10V
common ground terminal 20 (GND)

			Date	22.03.13	drawer MSR 230AC	X-CUBE compact	X-Cube control Master	draw.-No.: 12-1003
			Editor	JK	X-Cube C/R (L)/P/1230/1800		example	
			Tested	17.11.15			sample-wiring	P. 3.1
Changes	Date	Name	Norm		Original	Sub. f.	Sub. b.	9 P.

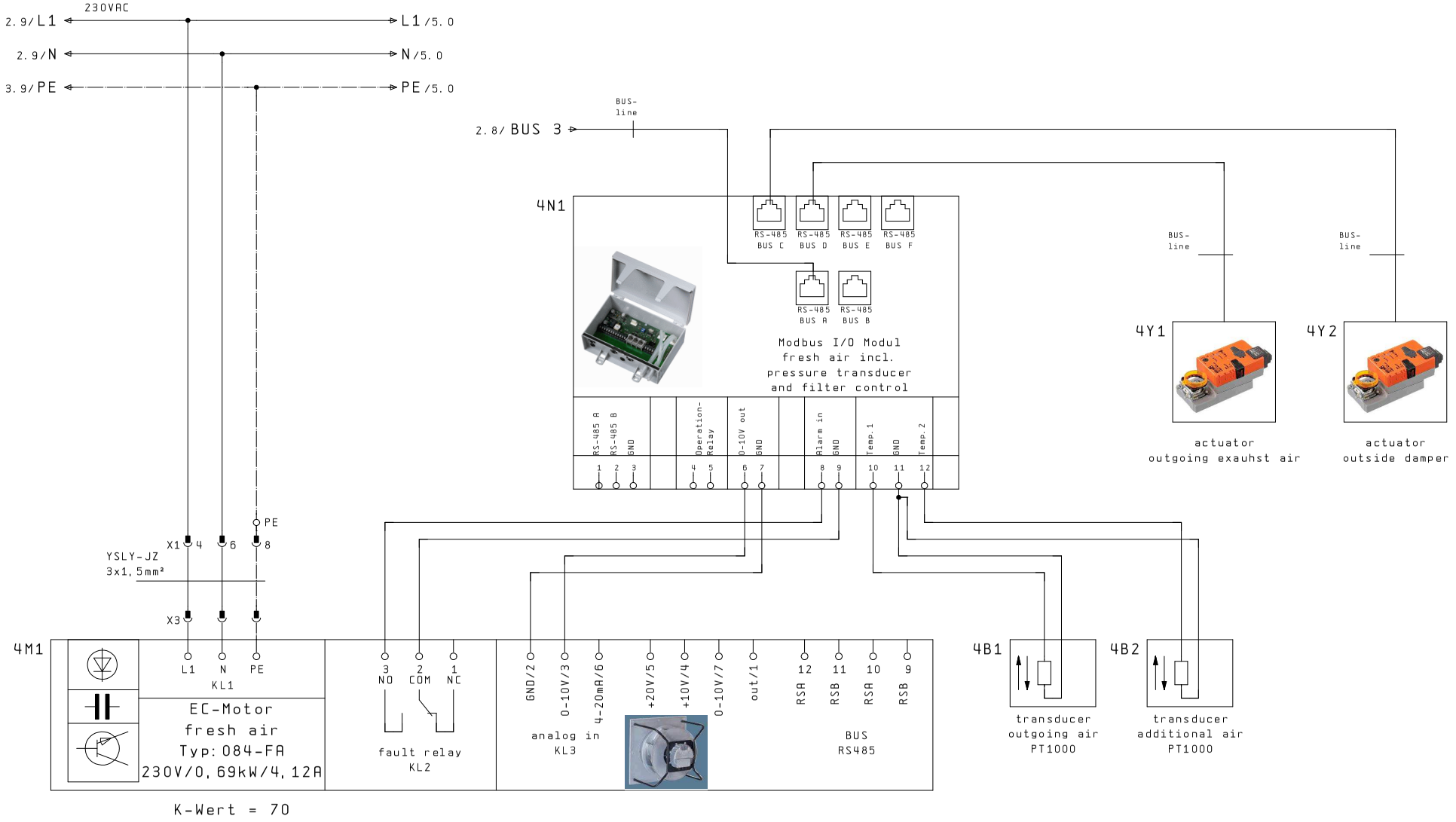

3.1

5

			Date	22.10.12	drawer MSR 230AC	X-Cube I/O FAN Modul/	draw.-No.: 12-1003	=
			Editor	JK	X-Cube C/R (L)/P/1230/1800	fresh air ventilator		+
			Tested	17.11.15				P. 4
Changes	Date	Name	Norm		Original / Sub. f.	Sub. b.		9 P.

X-CUBE compact

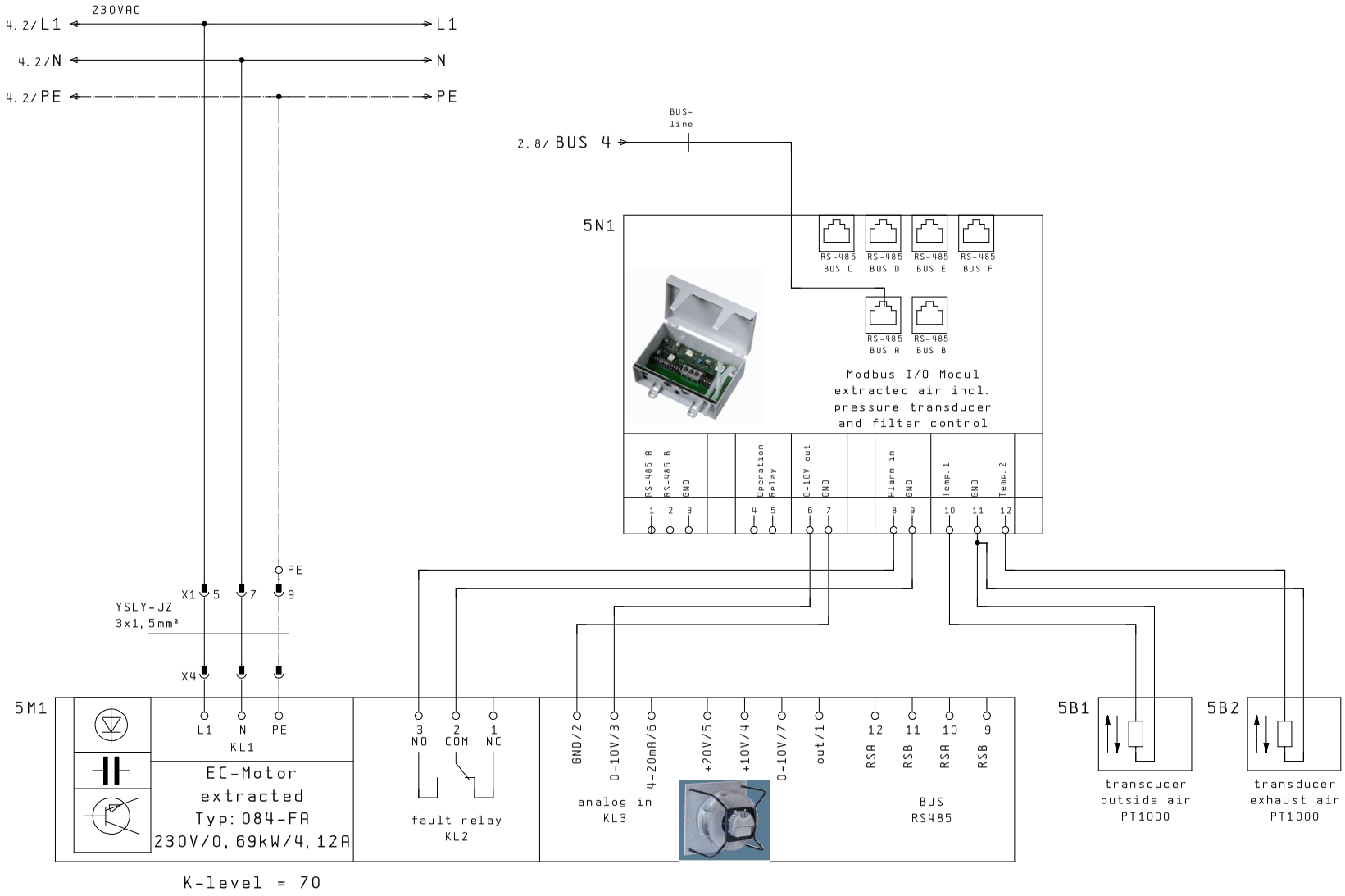

			Date	22.10.12	drawer MSR 230AC X-Cube C/R (L)/P/1230/1800		X-Cube I/O FAN Modul/ extracted air ventilator	draw.-No.: 12-1003	=
			Editor	JK					+
			Tested	17.11.15					P. 5
Changes	Date	Name	Norm		Original	Sub. f.	Sub. b.		9 P.

Terminal strip designation

X1

Function	Cable designation 8 (YSLY-JZ 3x1.5mm²)	Cable designation 5 (YSLY-JZ 3x1.5mm²)	Cable type	Destination	Connection	Terminal number	Jumper	Terminal name	Destination	Connection	Cable type	or	Page / path
main supply PE						1			PE				1.0
main supply L1						2			1F1	2			1.1
main supply N						3	●		1T1	N		x	1.1
Einspeisung N						3	●						1.1
=						3	●						1.2
voltage supply fresh air motor L1		1		X3		4	●		1T1	L		x	4.1
voltage supply extracted motor L1	1			X4		5	●		L1				5.1
voltage supply fresh air motor N						6	●		1T1	N		x	4.1
voltage supply extracted motor N						7	●		N				5.1
voltage supply fresh air motor PE						8			PE				4.33:69
voltage supply extracted motor PE						9			PE				5.33:69

Changes | Date | Name
Date 24.07.13
Editor JK
Tested 17.11.15
Norm
drawer MSR 230AC
X-Cube C/R (L)/P/1230/1800
Original | Sub.f. | Sub.b.
X CUBE compact
terminal X1
draw.-No.: 12-1003
= +
P. 6
9 P.
WUP1005E/08.12.2003

Klemmleistenbezeichnung

X2

Funktionstexte	Kabeltyp	Ziel-bezeich-nung	Anschluß	Klemmen-nummer	Brücken	Klemmen-name	Ziel-bezeich-nung	Anschluß	Kabeltyp	Seite/Pfad
BMS-/smoke-/fire dampershutt off		3N1	3	1						3.3
GND		3N1	4	2						3.3
extern on		3N1	5	3						3.3
GND		3N1	4	4						3.4
smoke extraction		3N1	6	5						3.4
GND		3N1	7	6						3.4
=		3N1	10	7						3.4
to revolve fast		3N1	11	8						3.4
set point shift		3N1	12	9						3.5
CO2 Sensor		3N1	13	10						3.5
GND		3N1	14	11						3.5
+24V		3N1	15	12						3.5
room temperature		3N1	16	13						3.5
GND		3N1	17	14						3.5
out side temperature		3N1	18	15						3.6
GND		3N1	17	16						3.6
status signal on				17			3N1	24		3.3
Betriebsmeldung				18			3N1	25		3.4
A-alarm				19			3N1	30		3.5
A-Alarm				20			3N1	31		3.5

WUP1005D/08. Apr. 1992

drawer MSR 230AC
X-Cube C/R (L)/P/1230/1800

Date 17.11.15
Editor WXP
Tested 17.11.15

X2

draw.-No.:12-1003

P. 7
9 P.

Bill of materials

WUP0001E 01.03.1994

Item designation	Amount	Designation	Type number	Supplier	Article number
Hardware:					
drawer steel plate 750x225mm	1	1		TROX	
X-Cube Control Master	1	3N1		TROX	A00000027516
transformer PWR	1	1T1		TROX	A00000027522
Mod-Bus cable connector	1	2N2		TROX	A00000027528
plug sensor	1	2X1		Wieland	GST1513S
plug supply pipe	1	1X1		Wieland	76.352.0736.0
circuit breaker C6A	1	1F1		Siemens	5SY4106-7
safty clip	1	1F2		Weidmüller GmbH & Co.	ASK 1/35
micro fuse 2,5A T 5x20mm	1	1F2		Sonepar	
DIN rail TS35	50cm			Licatec	
cable 3x1.5mm²	60cm	cable supply pipe		Sonepar	YSLY-JZ 3x1,5mm²
cable duct 20x40mm	40cm			Licatec	
snap in clamp	1			OBO	2105 012
AWV modular-plug	6			Sonepar	1290053
telefoncabel 6-core flat	100cm			Sonepar	1209571
raised head screw 4x20mm	4			van Beusekom	
raised head screw 4x4mm	15			van Beusekom	
network cable 1m	1			Sonepar	

			Date	12.10.12	drawer MSR 230AC		bill of materials	draw.-No.: 12-1003
			Editor	JK	X-Cube C/R (L)/P/1230/1800	X CUBE compact	part 1	
			Tested	17.11.15				P. 8
Changes	Date	Name	Norm		Original	Sub. f.	Sub. b.	9 P.

Bill of materials

WUP0001E 01.03.1994

Item designation	Amount	Designation	Type number	Supplier	Article number
terminal-material:					
terninal stop	2	X1/X2		Wago	249-117
PE-terminal 2,5mm²	2	X1/X2		Wago	280-907
terminal 2,5mm² grey	4	X1		Wago	280-901
double deck terminal 2,5mm grey	10	X2		Wago	870-501
cover plate double deck terminal	1	X2		Wago	870-518
double deck terminal PE pluggable	1	X2		Wago	870-107
double deck terminal grey pluggable	2	X2		Wago	870-101
cover plate pluggable	1	X1		Wago	870-118
endmodul 45° pluggable PE	2	X1		Wago	769-515
middlemodul 45° pluggable grey	2	X1		Wago	769-513
startmodul 45° pluggable grey	2	X1		Wago	769-512
WBS- terminal name 1-10	2	X1/X2		Wago	793-5599
terminal bridge	2	X2		Wago	870-402

8

			Date	12.10.12	drawer MSR 230AC	CUBE compact	bill of materials	draw.-No.: 12-1003
			Editor	JK	X-Cube C/R (L)/P/1230/1800		part 2	
			Tested	17.11.15				P. 9
Changes	Date	Name	Norm		Original	Sub. f.	Sub. b.	9 P.

E Circuit diagram tray 230 V AC-RHE

TROX® TECHNIK
The art of handling air

TROX GmbH

Heinrich-Trox-Platz
47504 Neukirchen-Vluyn
E-Mail: trox@trox.de, Internet: www.trox.de

Customer :
Type : drawer MSR 230VAC X-Cube C/R (L)/R/1300
Project name :

Manufacturer (Firm) : TROX
File name (\EPLAN4\P)
Project name : X-CUBE 1300E

:
:
:
:

Index. 00-11/15

Created on : 10.10.12 by : JK
Processed on : 17.11.15 by : JK

Highest Page No. : 9
No. of pages : 13

Page overview

ESSJ001E

Page	Designation	Additional field	Date	Revisor
0.1	cover page		16.07.13	JK
0.2	page overview		16.07.13	JK
0.3	drawer design		16.07.13	JK
1	main supply		16.07.13	JK
2	VVX-Controller, Cable-Adapter		16.07.13	JK
3	X-Cube control Master		16.07.13	JK
3.1	X-Cube control Master example sample-wiring		16.07.13	JK
4	X-Cube I/O FAN Modul/ fresh air ventilator		16.07.13	JK
5	X-Cube I/O FAN Modul/ extracted air ventilator		16.07.13	JK
6	terminal X1		16.07.13	JK
7	terminal X2		16.07.13	JK
8	bill of materials part 1		16.07.13	JK
9	bill of materials part 2		16.07.13	JK

			Date	12.10.12	drawer MSR 230AC		page overview	draw.-No.: 12-1001
			Editor	JK	X-Cube C/R (L)/R/1300	X CUBE compact		
			Tested	17.11.15				P. 0.2
Changes	Date	Name	Norm		Original	Sub. f.	Sub. b.	9 P.

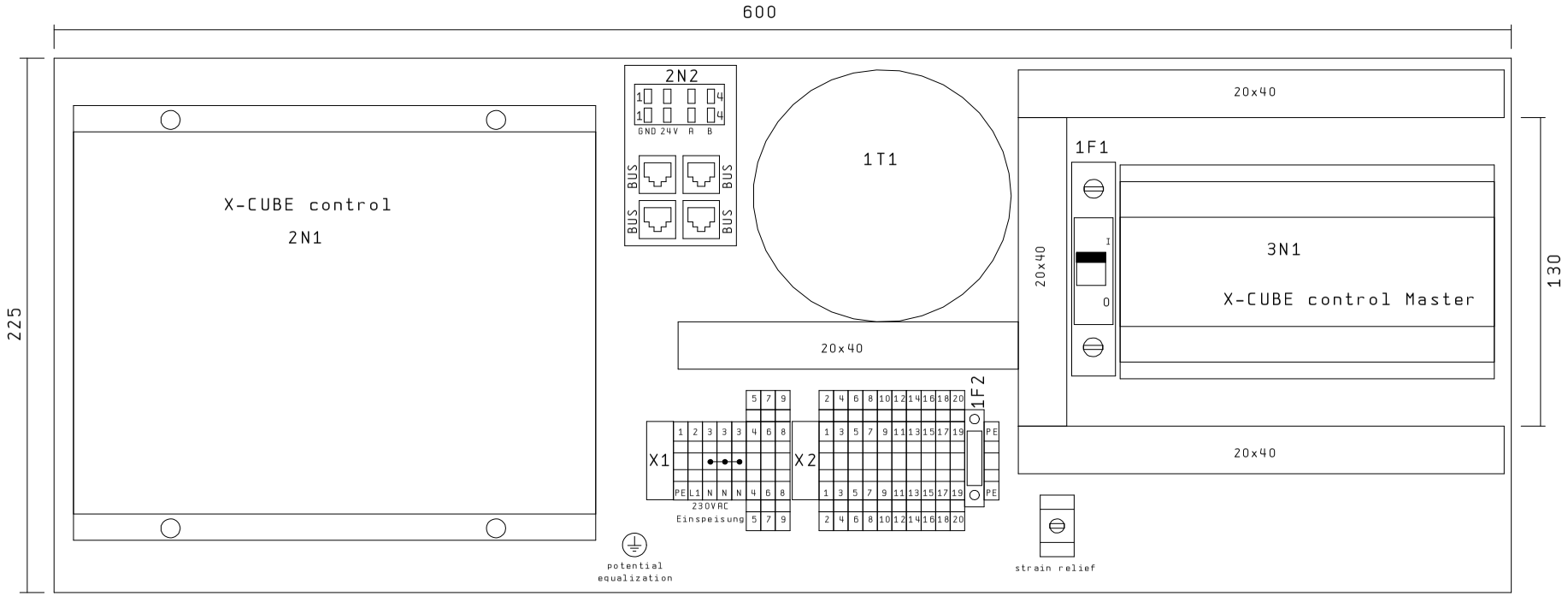

0.2

1

			Date	12.10.12	drawer MSR 230AC		drawer design	draw.-No.: 12-1001	=
			Editor	JK	X-Cube C/R (L)/R/1300	X-CUBE compact			+
			Tested	17.11.15					P. 0.3
Changes	Date	Name	Norm		Original	Sub. f.	Sub. b.		9 P.

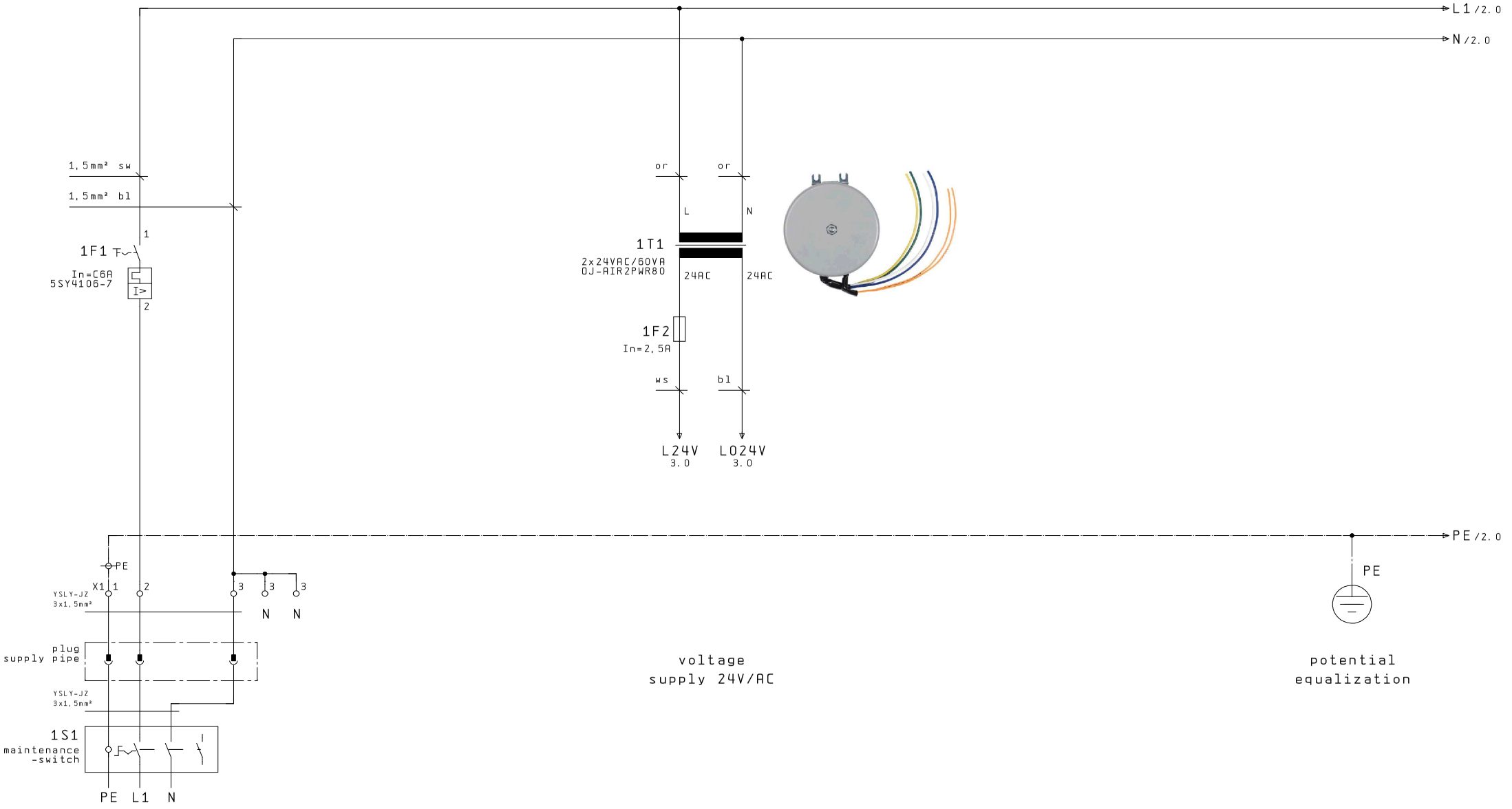

			Date	12.10.12	drawer MSR 230AC	X-Cube C/R (L)/R/1300	main supply	draw.-No.: 12-1001
			Editor	JK				
			Tested	17.11.15				P. 1
Changes	Date	Name	Norm		Original	Sub. f.	Sub. b.	9 P.

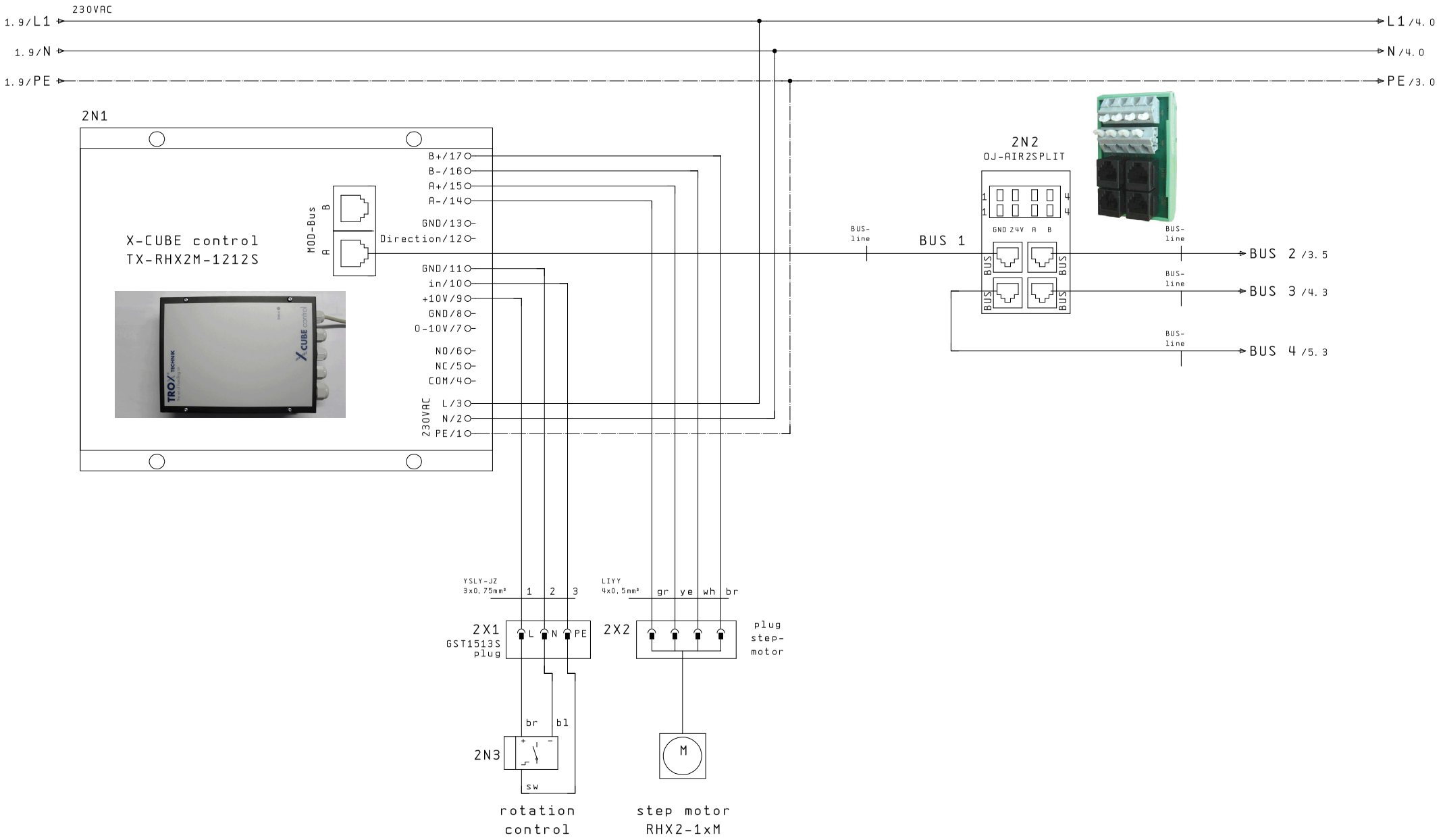

			Date	12.10.12	drawer MSR 230AC		VVX-Controller,	draw.-No.: 12-1001	=
			Editor	JK	X-Cube C/R (L)/R/1300	X-CUBE compact	Cable-Adapter		+
			Tested	17.11.15					P. 2
Changes	Date	Name	Norm		Original	Sub. f.	Sub. b.		9 P.

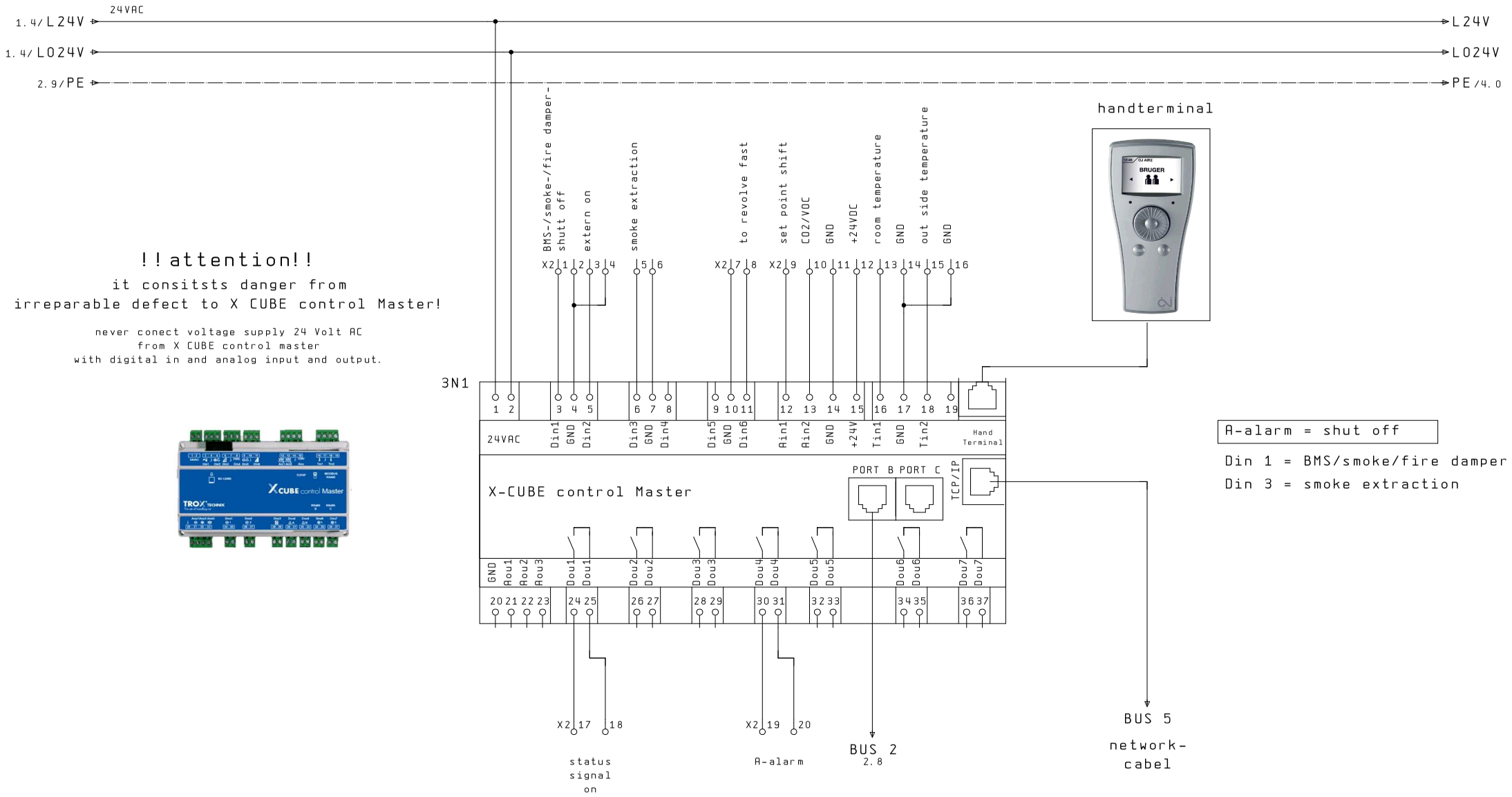

			Date	12.10.12	drawer MSR 230AC X-Cube C/R (L)/R/1300	X CUBE compact	X-Cube control Master	draw.-No.: 12-1001
			Editor	JK				
			Tested	17.11.15				P. 3
Changes	Date	Name	Norm		Original	Sub. f.	Sub. b.	9 P.

example
sample-wiring

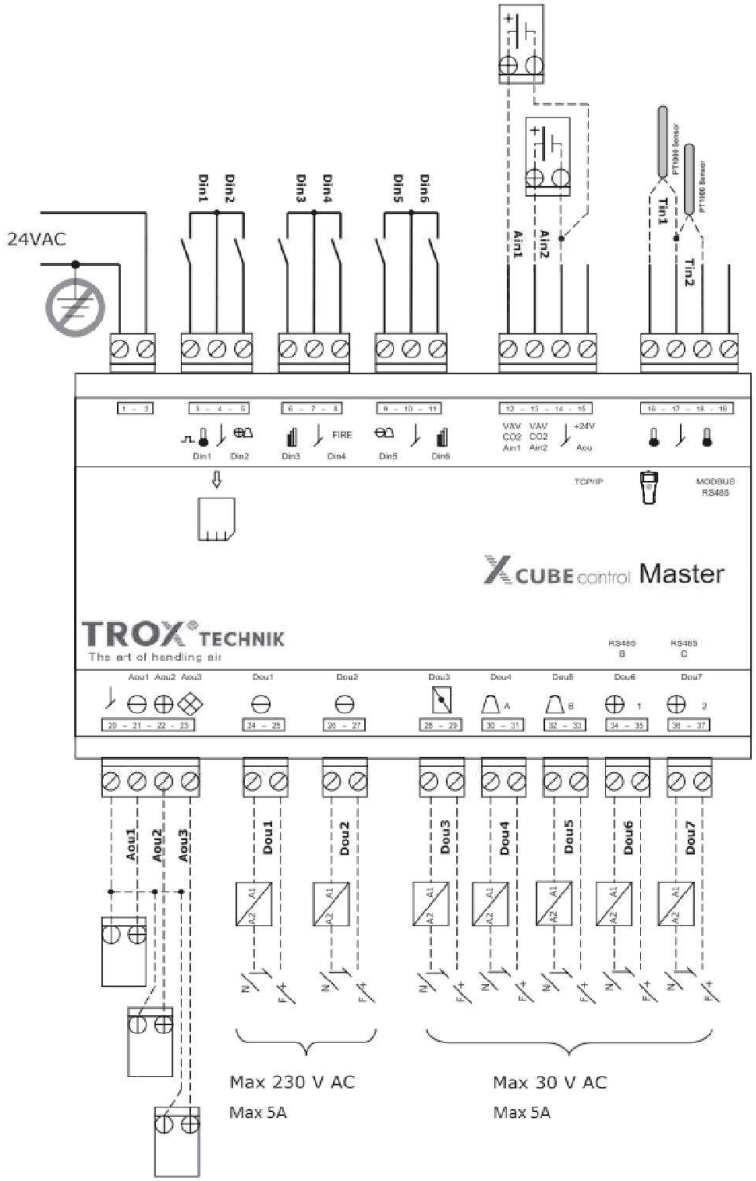

digital in

Din 1-6 to be
potential free connected

digital out

7-potential free out put
Dou 1&2 max. 230V/AC/DC max. 5A
Dou 3-7 max. 30V/AC/DC max. 5A

analog in

Ain 1&2 signal input range 0-10V
voltage supply 24VDC for
aktive sensor terminal 14 (GND)
terminal 15 (+24VDC)

analog out

Aou 1-3 signal out range 0-10V
common ground terminal 20 (GND)

			Date	22.03.13	drawer MSR 230AC X-Cube C/R (L)/R/1300	X CUBE compact	X-Cube control Master example sample-wiring	draw.-No.: 12-1001
			Editor	JK				
			Tested	17.11.15				P. 3.1
Changes	Date	Name	Norm		Original / Sub. f.	Sub. b.		9 P.

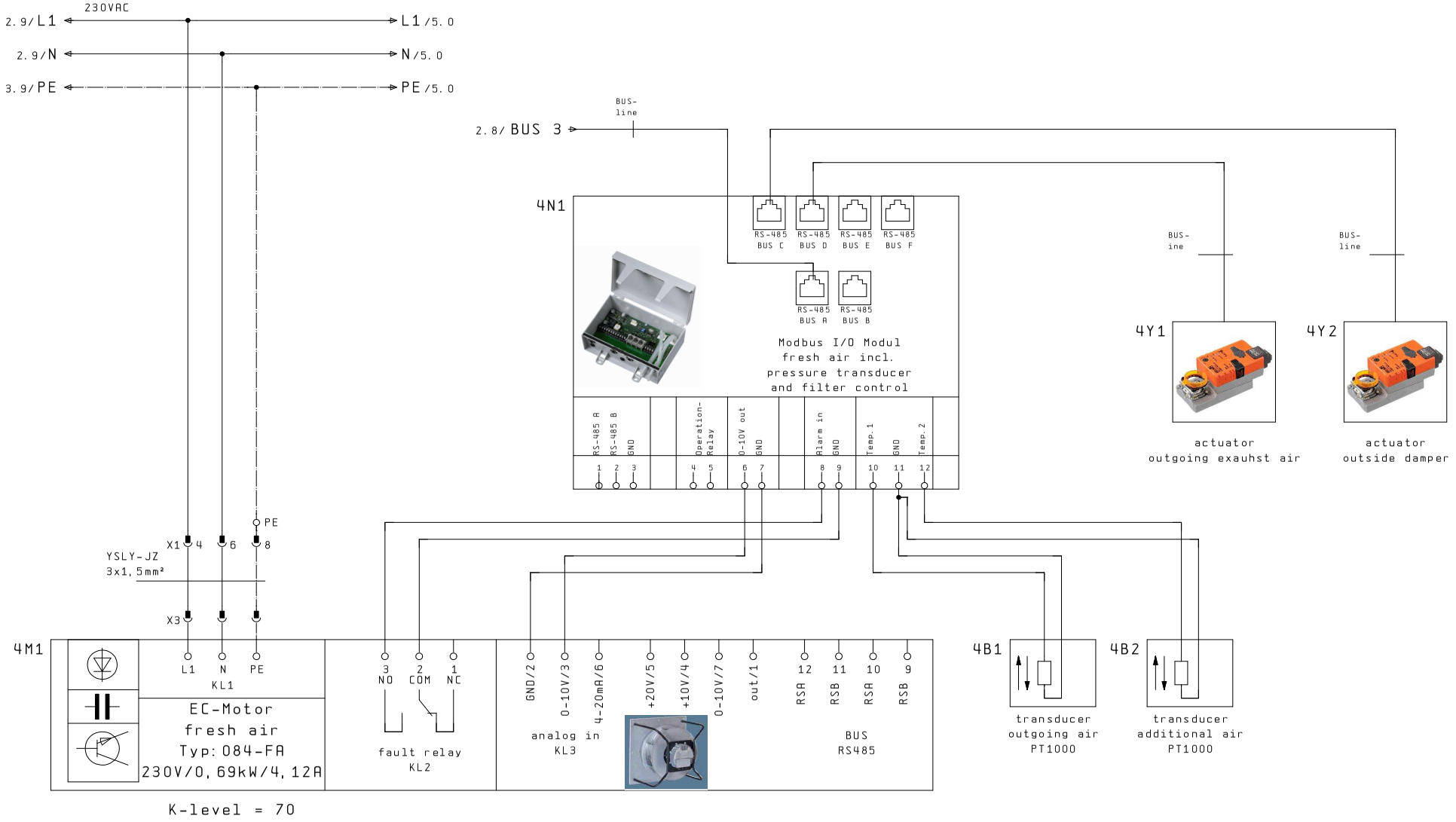

			Date	22.10.12	drawer MSR 230AC X-Cube C/R (L)/R/1300	X CUBE compact	X-Cube I/O FAN Modul/ fresh air ventilator	draw.-No.: 12-1001
			Editor	JK				
			Tested	17.11.15				P. 4
Changes	Date	Name	Norm		Original / Sub. f.	Sub. b.		9 P.

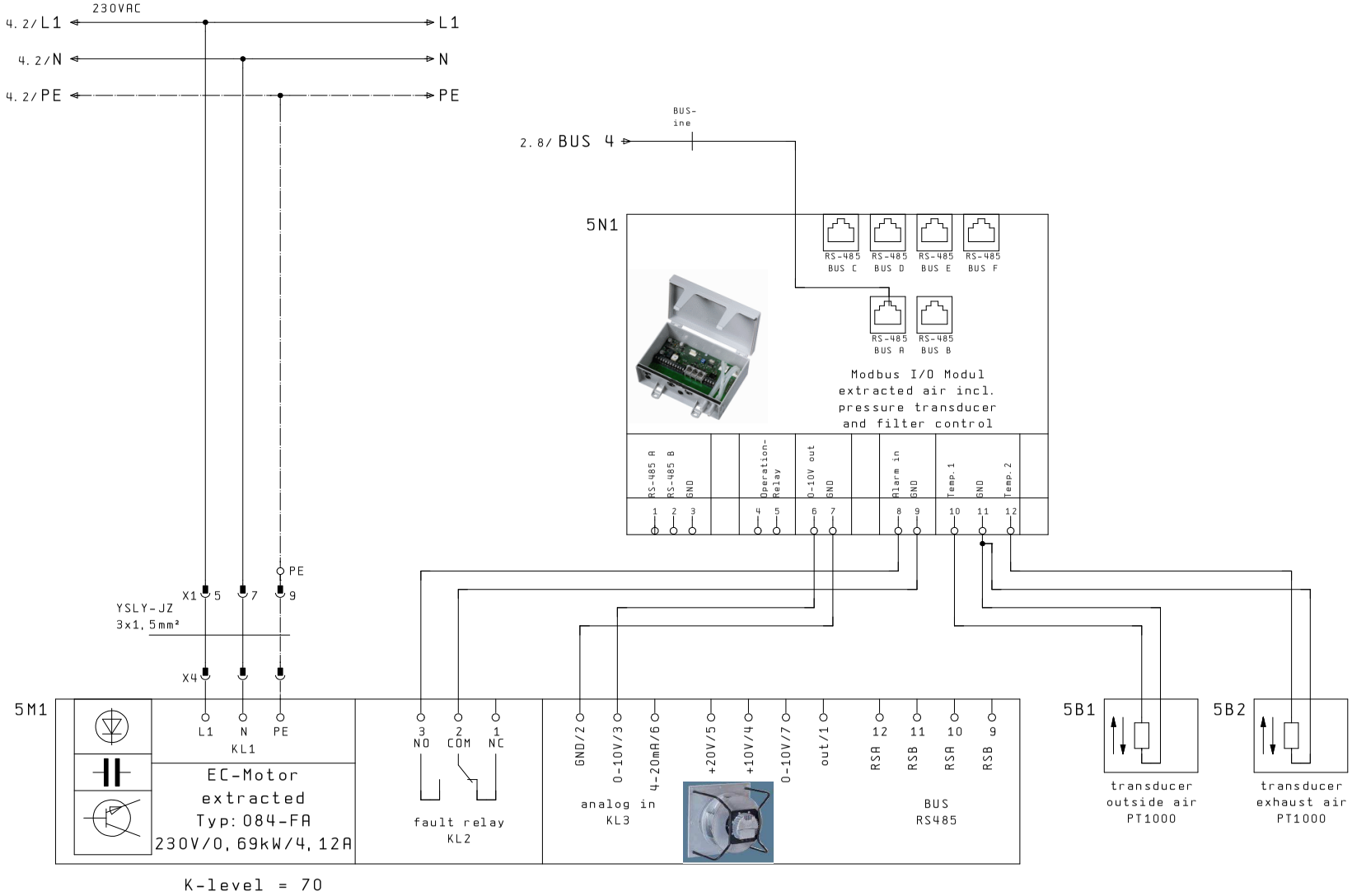

			Date	22.10.12	drawer MSR 230AC X-Cube C/R (L)/R/1300	X CUBE compact	X-Cube I/O FAN Modul/ extracted air ventilator	draw.-No.: 12-1001
			Editor	JK				
			Tested	17.11.15				P. 5
Changes	Date	Name	Norm		Original	Sub. f.	Sub. b.	9 P.

Terminal strip designation

X1

Function	Cable designation 2 (YSLY-JZ 3x1.5mm²)	Cable designation 1 (YSLY-JZ 3x1.5mm²)	Cable type	Destination	Connection	Terminal number	Jumper	Terminal name	Destination	Connection	Cable type	1.5mm² sw	or	Page / path
main supply PE						1			PE					1.0
main supply L1						2			1F1	2				1.1
main supply N						3								1.1
"						3								1.1
"						3								1.2
voltage supply fresh air motor L1		1		1M1	L	4			1F1	1		x		1.3
voltage supply extracted air motor L1	1			1M2	L	5			1T1	L			x	1.3
voltage supply fresh air motor N		2		1M1	N	6								1.5
voltage supply extracted air motor N	2			1M2	N	7			1T1	N			x	1.5
voltage supply fresh air motor PE		PE		1M1	PE	8			PE					1.108:83
voltage supply extracted air motor PE	PE			1M2	PE	9			PE					1.112:83

drawer MSR 230AC
X-Cube C/R (L)/R/1300
terminal X1

Changes	Date	Name

Date 12.10.12
Editor JK
Tested 17.11.15
Norm

Original | Sub.f. | Sub.b.

X CUBE compact

draw.-No.: 12-1001
=
+
P. 6
9 P.

WUP1005E/08.12.2003

Klemmleistenbezeichnung

X2

Funktionstexte	Kabelbezeichnung / Kabeltyp	Ziel-bezeich-nung	Anschluß	Klemmen-nummer	Brücken	Klemmen-name	Ziel-bezeich-nung	Anschluß	Kabelbezeichnung / Kabeltyp	Seite/ Pfad
BMS-/smoke-/fire dampershutt off		3N1	3	1						3.3
GND		3N1	4	2						3.3
extern on		3N1	5	3						3.3
GND		3N1	4	4						3.4
smoke extraction		3N1	6	5						3.4
GND		3N1	7	6						3.4
=		3N1	10	7						3.4
to revolve fast		3N1	11	8						3.4
set point shift		3N1	12	9						3.5
CO2 sensor		3N1	13	10						3.5
GND		3N1	14	11						3.5
+24V		3N1	15	12						3.5
room temperature		3N1	16	13						3.5
GND		3N1	17	14						3.5
out side temperature		3N1	18	15						3.6
GND		3N1	17	16						3.6
status signal on				17			3N1	24		3.3
Betriebsmeldung				18			3N1	25		3.4
A-alarm				19			3N1	30		3.5
A-Alarm				20			3N1	31		3.5

WUP1005D/08.Apr.1992

Changes | Date | Name
Date 17.11.15
Editor WXP
Tested 17.11.15
Norm

drawer MSR 230AC
X-Cube C/R (L)/R/1300

Original | Sub.f. | Sub.b.

X2

draw.-No.:12-1001

=
+

P. 7
9 P.

Bill of materials

WUP0001E 01.03.1994

Item designation	Amount	Designation	Type number	Supplier	Article number
Hardware:					
drawer steel plate 750x225mm	1	1		TROX	
X-Cube Control Master	1	3N1		TROX	A00000027516
transformer PWR	1	1T1		TROX	A00000027522
WRG-controller	1	2N1		TROX	A00000027521
Mod-Bus cable connector	1	2N2		TROX	A00000027528
plug sensor	1	2X1		Wieland	GST1513S
plug supply pipe	1	1X1		Wieland	76.352.0736.0
circuit breaker C6A	1	1F1		Siemens	5SY4106-7
safty clip	1	1F2		Weidmüller GmbH & Co.	ASK 1/35
micro fuse 2,5A T 5x20mm	1	1F2		Sonepar	
DIN rail TS35	50cm			Licatec	
cable 3x1.5mm²	60cm	cable supply pipe		Sonepar	YSLY-JZ 3x1,5mm²
cable 3x0,75mm²	40cm	cable sensory		Sonepar	YSLY-JZ 3x0,75mm²
cable duct 20x40mm	40cm			Licatec	
snap in clamp	1			OBO	2105 012
AWV modular-plug	6			Sonepar	1290053
telefoncabel 6-core flat	100cm			Sonepar	1209571
raised head screw 4x20mm	4			van Beusekom	
raised head screw 4x4mm	15			van Beusekom	
network cable 1m	1			Sonepar	

			Date	12.10.12	drawer MSR 230AC		bill of materials	draw.-No.: 12-1001
			Editor	JK	X-Cube C/R (L)/R/1300	X CUBE compact	part 1	
			Tested	17.11.15				P. 8
Changes	Date	Name	Norm		Original	Sub. f.	Sub. b.	9 P.

Bill of materials

WUP0001E 01.03.1994

Item designation	Amount	Designation	Type number	Supplier	Article number
terminal-material:					
terninal stop	2	X1/X2		Wago	249-117
PE-terminal 2,5mm²	2	X1/X2		Wago	280-907
terminal 2,5mm² grey	4	X1		Wago	280-901
double deck terminal 2,5mm grey	10	X2		Wago	870-501
cover plate double deck terminal	1	X2		Wago	870-518
double deck terminal PE pluggable	1	X2		Wago	870-107
double deck terminal grey pluggable	2	X2		Wago	870-101
cover plate pluggable	1	X1		Wago	870-118
endmodul 45° pluggable PE	2	X1		Wago	769-515
middlemodul 45° pluggable grey	2	X1		Wago	769-513
startmodul 45° pluggable grey	2	X1		Wago	769-512
WBS- terminal name 1-10	2	X1/X2		Wago	793-5599
terminal bridge	2	X2		Wago	870-402

			Date	12.10.12	drawer MSR 230AC	CUBE compact	bill of materials	draw.-No.: 12-1001
			Editor	JK	X-Cube C/R (L)/R/1300		part 2	
			Tested	17.11.15				P. 9
Changes	Date	Name	Norm		Original	Sub. f.	Sub. b.	9 P.

F Circuit diagram tray 400 V AC-PHE

TROX® TECHNIK
The art of handling air

TROX GmbH

Heinrich-Trox-Platz
47504 Neukirchen-Vluyn
E-Mail: trox@trox.de, Internet: www.trox.de

Customer :
Type : drawer MSR 400VAC X-Cube C/R (L)/P/2400/3600
Project name :

Manufacturer (Firm) : TROX
File name (\EPLAN4\P)
Project name : X-CUBE 400-PE

:
:
:
:

Index. 00-11/15

Created on : 16.10.12 by : JK
Processed on : 17.11.15 by : JK

Highest Page No. : 9
No. of pages : 13

Page overview

ESSJ001E

Page	Designation	Additional field	Date	Revisor
0.1	cover page		24.07.13	JK
0.2	page overview		24.07.13	JK
0.3	drawer design		24.07.13	JK
1	main supply		24.07.13	JK
2	Cable-Adapter		24.07.13	JK
3	X-Cube control Master		24.07.13	JK
3.1	X-Cube control Master example sample-wiring		24.07.13	JK
4	X-Cube I/O FAN Modul/ fresh air ventilator		24.07.13	JK
5	X-Cube I/O FAN Modul/ extracted air ventilator		24.07.13	JK
6	terminal X1		24.07.13	JK
7	terminal X2		24.07.13	JK
8	bill of materials part 1		24.07.13	JK
9	bill of materials part 2		24.07.13	JK

			Date	12.10.12	drawer MSR 400AC X-Cube C/R (L)/P/2400/3600	CUBE compact	page overview	draw.-no.: 12-1004	=
			Editor	JK					+
			Tested	17.11.15					P. 0.2
Changes	Date	Name	Norm		Original	Sub. f.	Sub. b.		9 P.

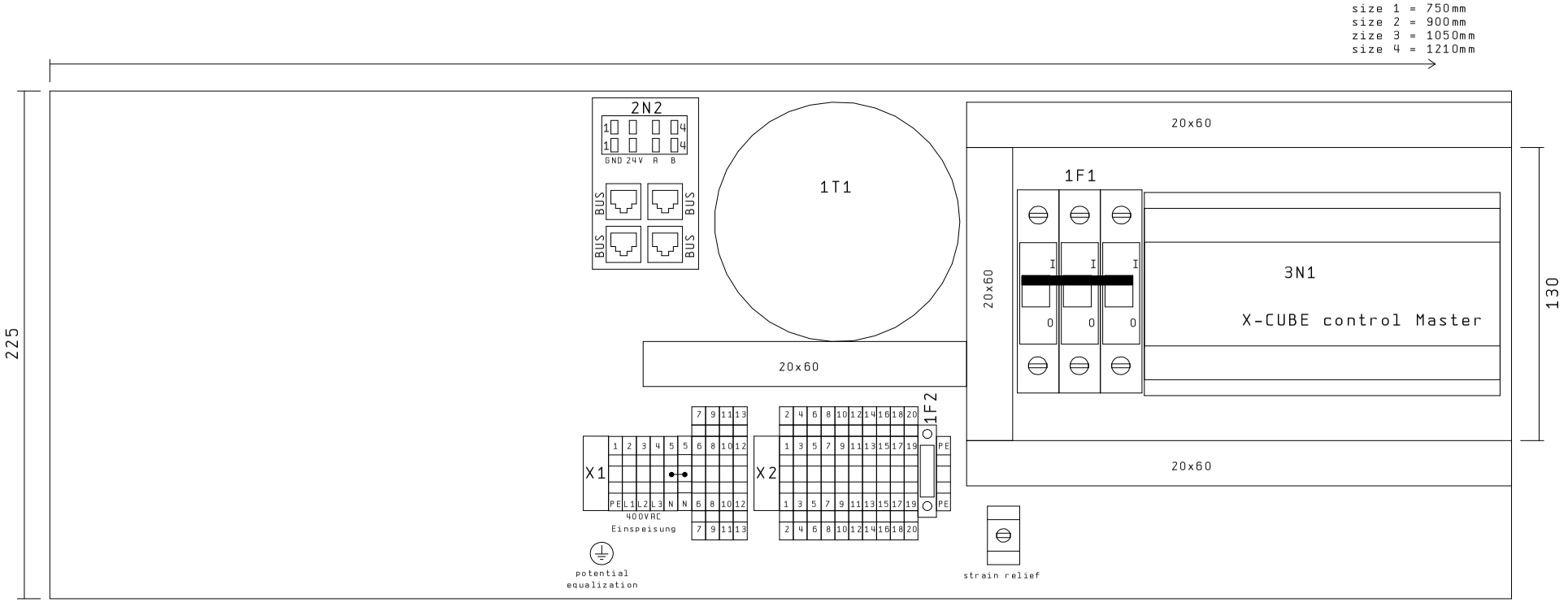

			Date	12.10.12	drawer MSR 400AC X-Cube C/R (L)/P/2400/3600	XCUBE compact	drawer design	draw.-no.: 12-1004
			Editor	JK				
			Tested	17.11.15				P. 0.3
Changes	Date	Name	Norm		Original	Sub. f.	Sub. b.	9 P.

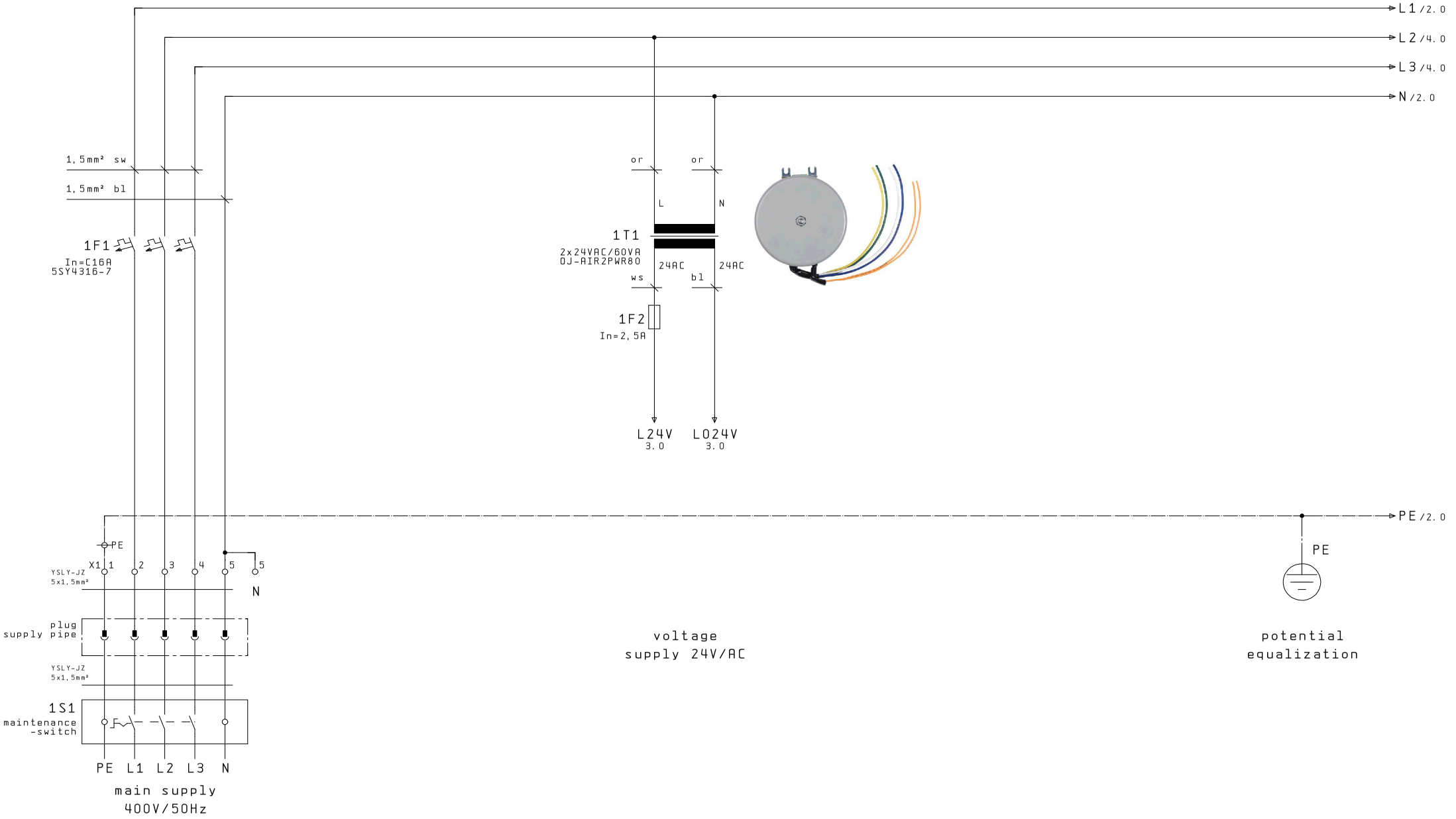

0.3

2

			Date	12.10.12	drawer MSR 400AC X-Cube C/R (L)/P/2400/3600		main supply	draw.-no.: 12-1004	=
			Editor	JK					+
			Tested	17.11.15					P. 1
Changes	Date	Name	Norm		Original	Sub. f.	Sub. b.		9 P.

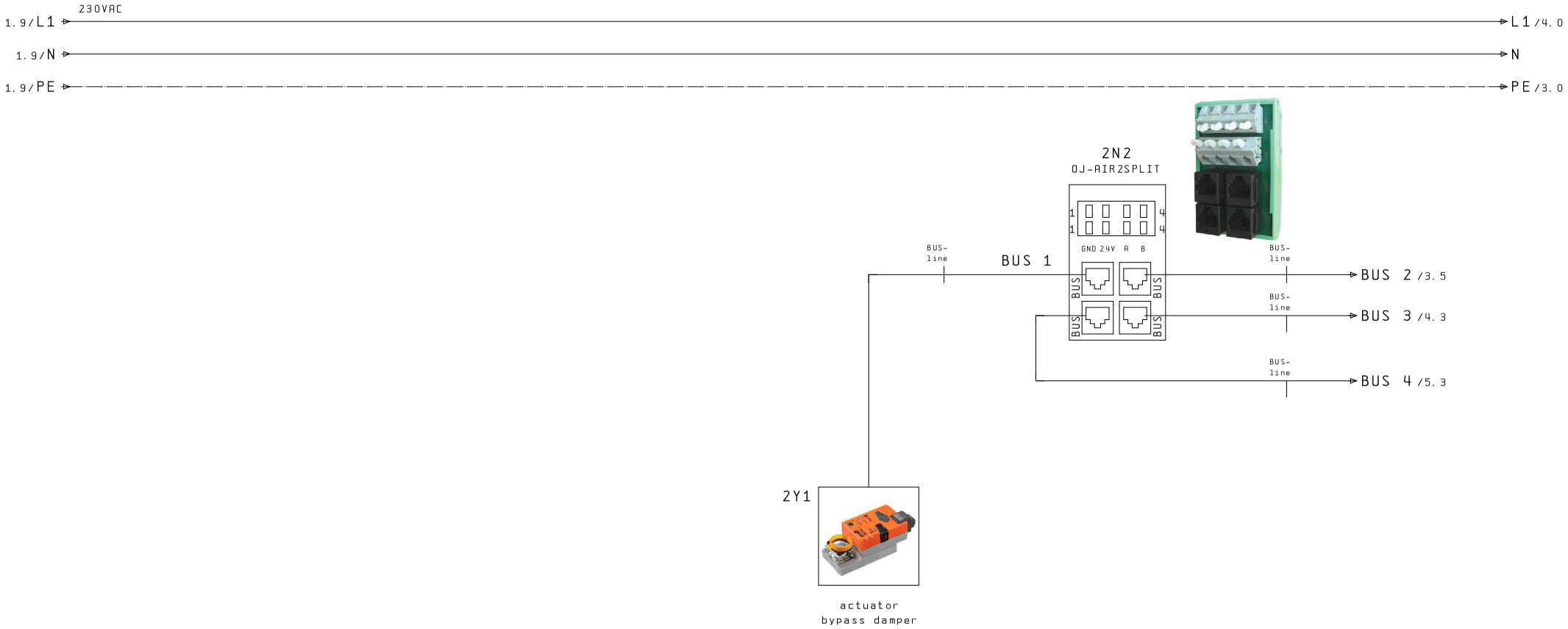

			Date	12.10.12	drawer MSR 400AC X-Cube C/R (L)/P/2400/3600		Cable-Adapter	draw.-no.: 12-1004	=
			Editor	JK					+
			Tested	17.11.15					P. 2
Changes	Date	Name	Norm		Original	Sub. f.	Sub. b.		9 P.

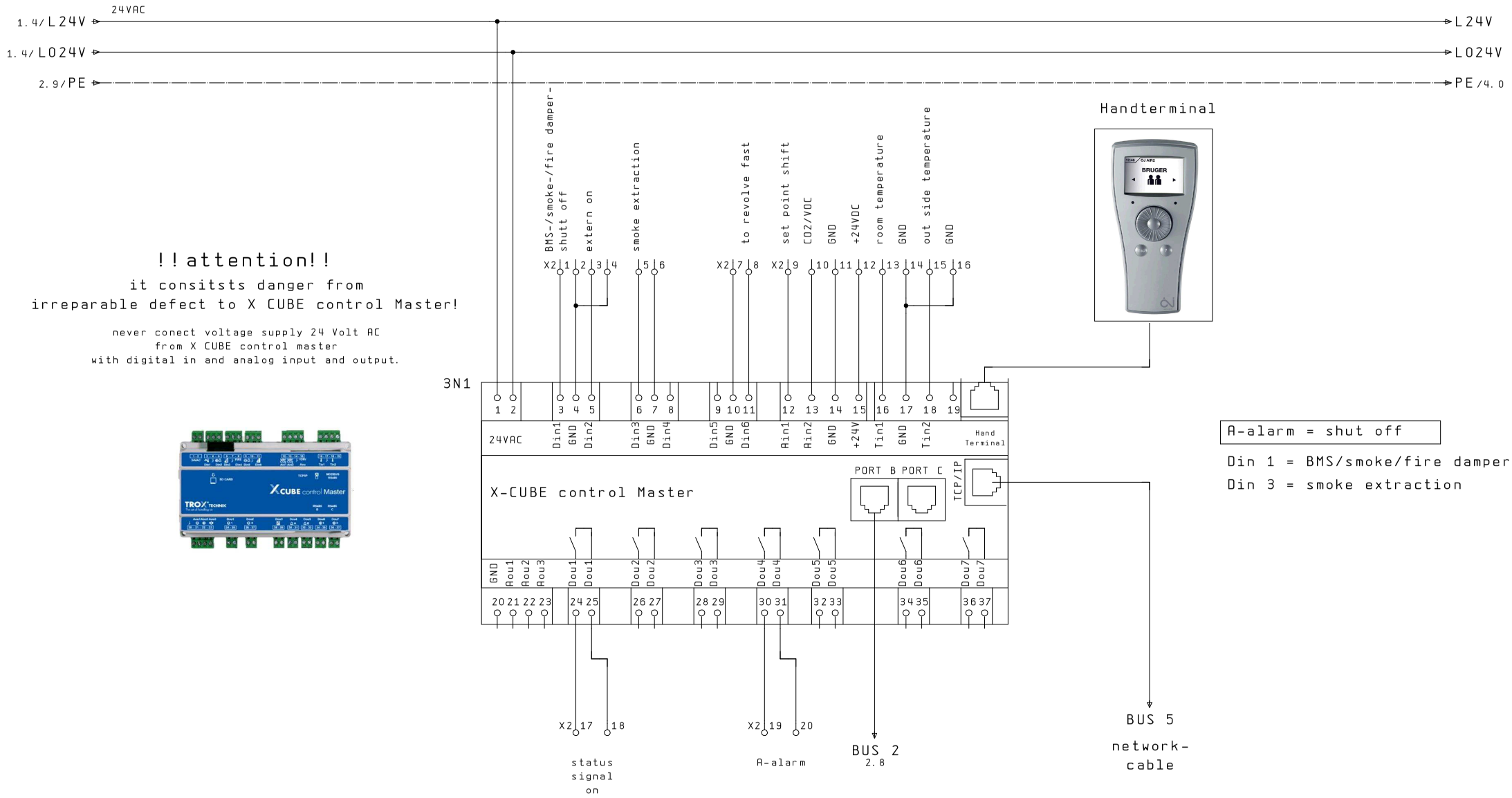

			Date	12.10.12	drawer MSR 400AC X-Cube C/R (L)/P/2400/3600	X-CUBE compact	X-Cube control Master	draw.-no.: 12-1004
			Editor	JK				
			Tested	17.11.15				P. 3
Changes	Date	Name	Norm		Original	Sub. f.	Sub. b.	9 P.

example
sample-wiring

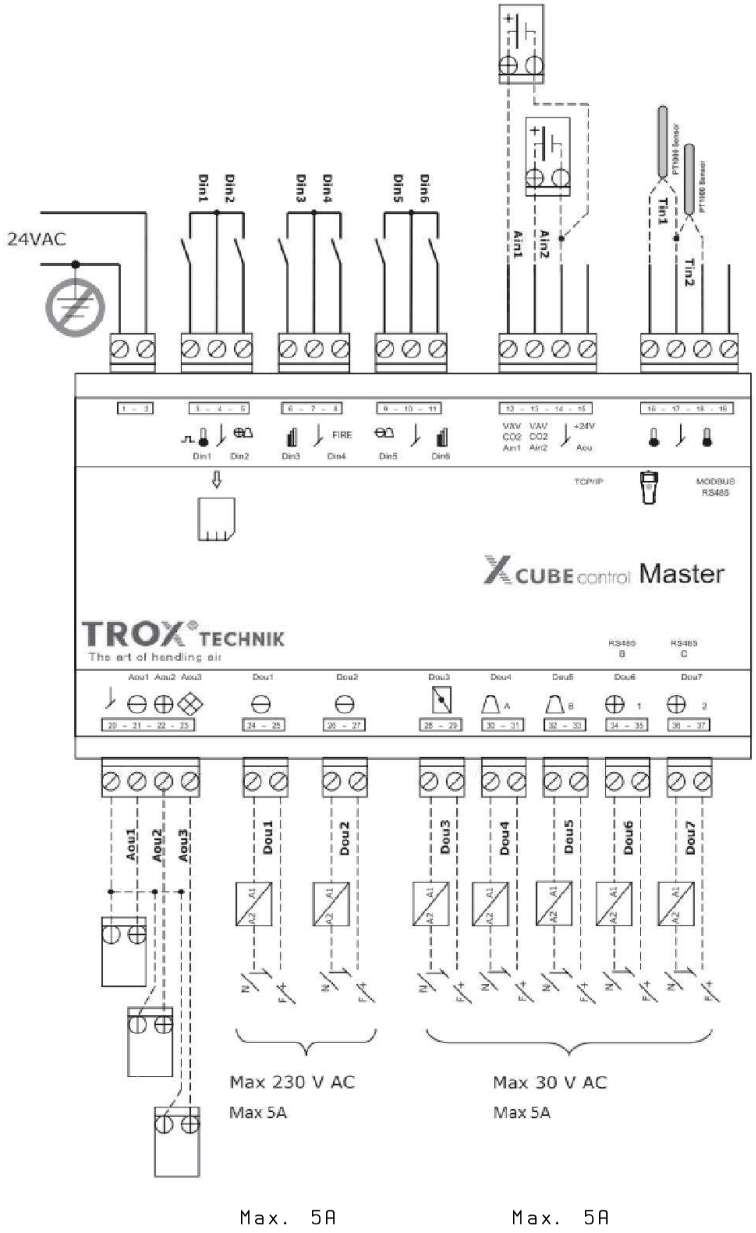

digital in

Din 1-6 to be
potential free connected

digital out

7-potential free out put
Dou 1&2 max. 230V/AC/DC max. 5A
Dou 3-7 max. 30V/AC/DC max. 5A

analog in

Ain 1&2 signal input range 0-10V
voltage supply 24VDC for
aktive sensor terminal 14 (GND)
terminal 15 (+24VDC)

analog out

Aou 1-3 signal out range 0-10V
common ground terminal 20 (GND)

			Date	22.03.13	drawer MSR 400AC X-Cube C/R (L)/P/2400/3600	X-CUBE compact	X-Cube control Master example sample-wiring	draw.-no.: 12-1004
			Editor	JK				
			Tested	17.11.15				P. 3.1
Changes	Date	Name	Norm		Original	Sub. f.	Sub. b.	9 P.

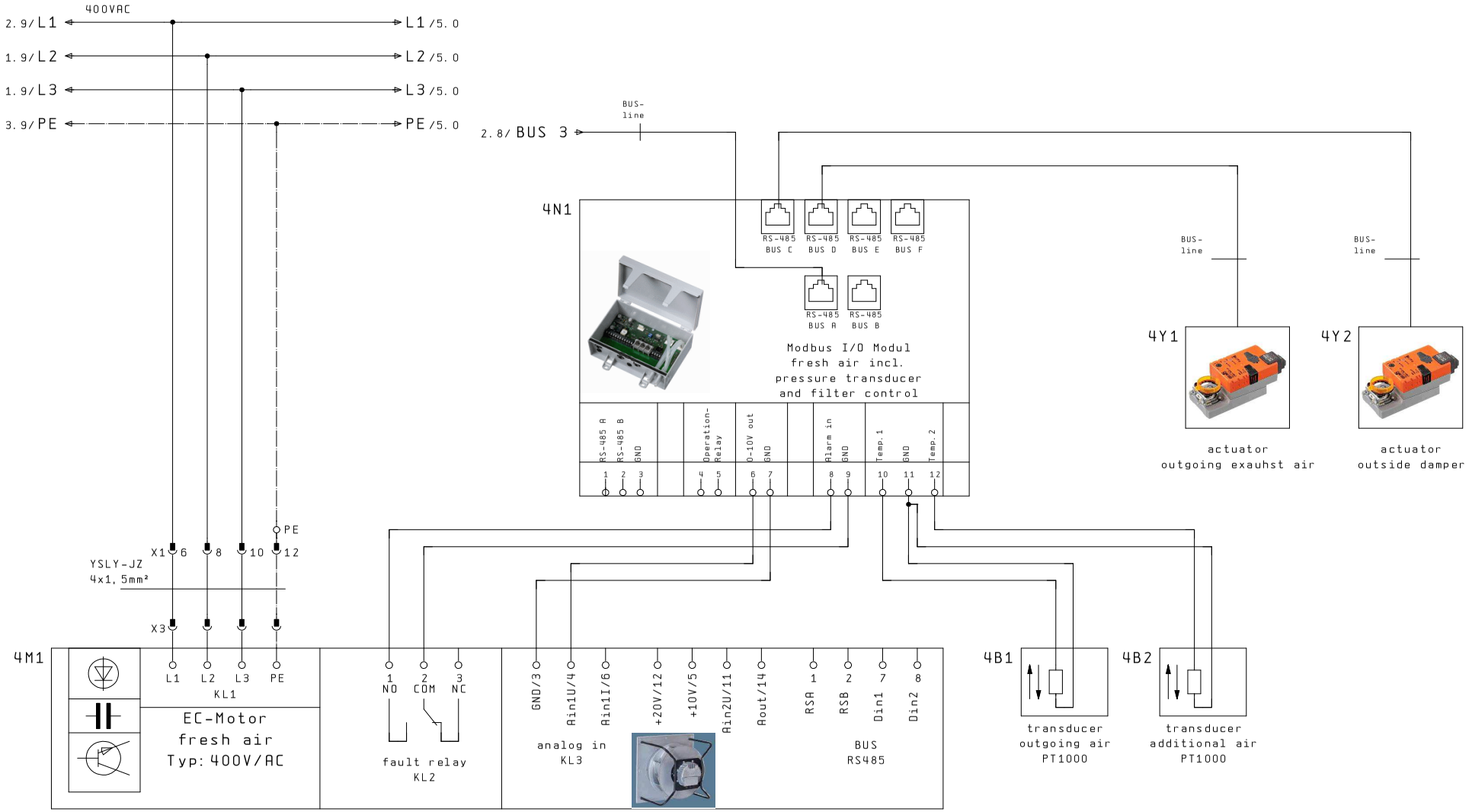

Typ:	Motor:	[kW]:	[A]:	K-level:
2400	112-GA	1,65	2,5	116
3600	112-GA	1,7	2,7	148

3.1

5

			Date	22.10.12	drawer MSR 400AC X-Cube C/R (L)/P/2400/3600	X CUBE compact	X-Cube I/O FAN Modul/ fresh air ventilator	draw.-no.: 12-1004
			Editor	JK				
			Tested	17.11.15				P. 4
Changes	Date	Name	Norm		Original	Sub. f.	Sub. b.	9 P.

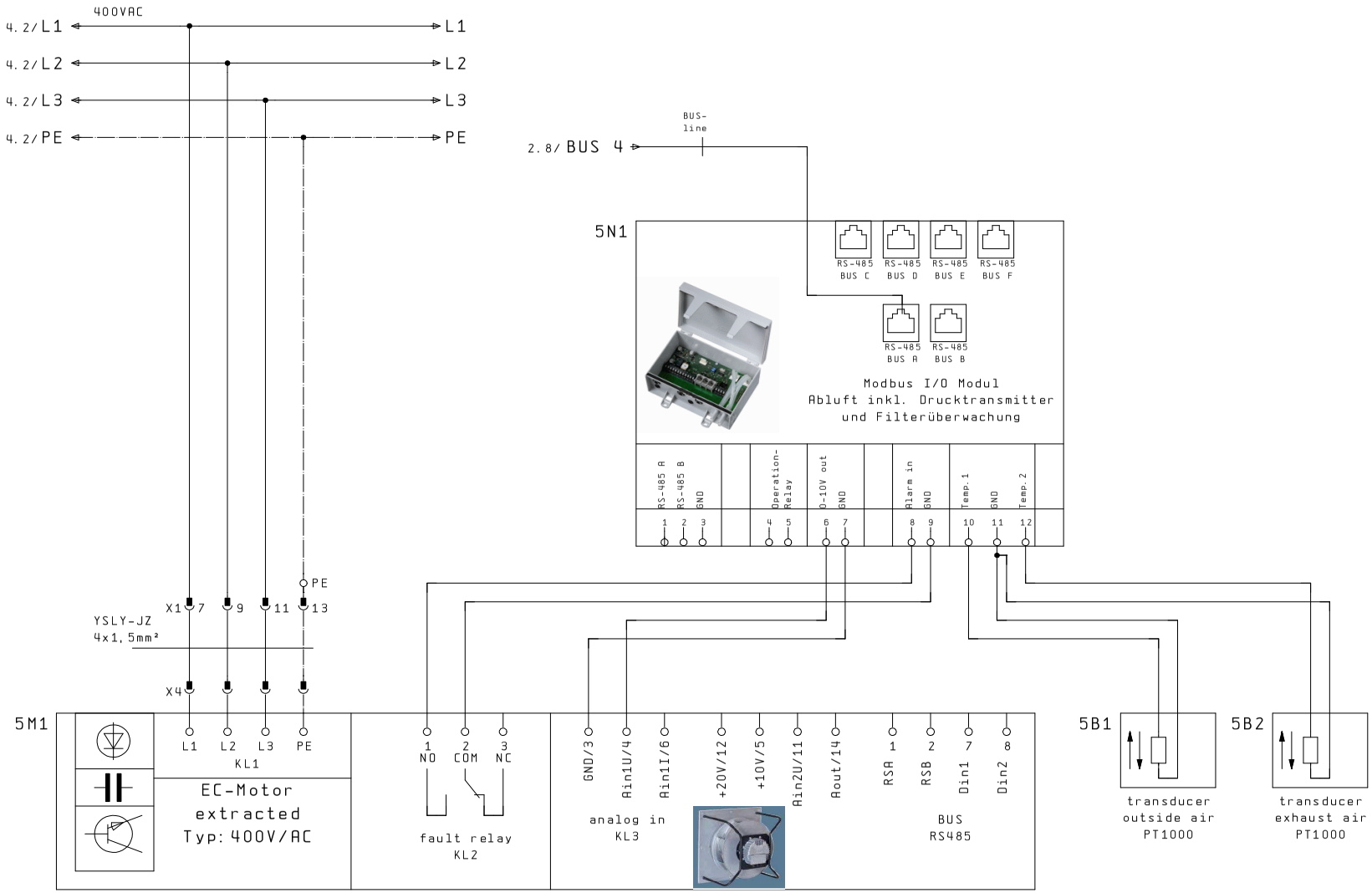

Typ:	Motor:	[kW]:	[A]:	K-level:
2400	112-GA	1,65	2,5	116
3600	112-GA	1,7	2,6	148

			Date	22.10.12	drawer MSR 400AC X-Cube C/R (L)/P/2400/3600	CUBE compact	X-Cube I/O FAN Modul/ extracted air ventilator	draw.-no.: 12-1004
			Editor	JK				
			Tested	17.11.15				P. 5
Changes	Date	Name	Norm		Original	Sub. f.	Sub. b.	9 P.

Terminal strip designation X1

Function	W8 YSLY-JZ 4x1.5mm²	W5 YSLY-JZ 4x1.5mm²	Cable designation / Cable type	Destination	Connection	Terminal number	Jumper	Terminal name	Destination	Connection	Cable designation / Cable type	or	1.5mm² sw	Page / path
main supply PE						1			PE					1.0
main supply L1						2			1F1					1.1
main supply L2						3			1F1					1.1
main supply L3						4			1F1					1.1
main supply N						5	●		1T1	N		x		1.1
=						5	●							1.1
voltage supply fresh air motor L1		1		X3		6			1F1	_1			x	4.1
voltage supply extracted motor L1	1			X4		7			X1	6				5.1
voltage supply fresh air motor L2						8			1T1	L		x		4.1
voltage supply extracted motor L2						9			X1	8				5.1
voltage supply fresh air motor L3						10			1F1	_5			x	4.1
voltage supply extracted motor L3						11			X1	10				5.1
voltage supply fresh air motor PE						12			PE					4.35:69
voltage supply extracted motor PE						13			PE					5.35:69

Changes	Date	Name

Date	24.07.13	
Editor	JK	
Tested	17.11.15	
Norm		
Original	Sub.f.	Sub.b.

drawer MSR 400AC X-Cube
C/R (L)/P/2400/3600

X CUBE compact

terminal X1

draw.-no.:12-1004

= +

P. 6
9 P.

WUP1005E/08.12.2003

Funktionstexte	Kabelbezeichnung Kabeltyp	Klemmleistenbezeichnung X2 Ziel-bezeich-nung	Anschluß	Klemmen-nummer	Brücken	Klemmen-name	Ziel-bezeich-nung	Anschluß	Kabelbezeichnung Kabeltyp	Seite/Pfad
BMS-/smoke-/fire dampershutt off		3N1	3	1						3.3
GND		3N1	4	2						3.3
extern on		3N1	5	3						3.3
GND		3N1	4	4						3.4
smoke extraction		3N1	6	5						3.4
GND		3N1	7	6						3.4
=		3N1	10	7						3.4
to revolve fast		3N1	11	8						3.4
set point shift		3N1	12	9						3.5
CO2 Sensor		3N1	13	10						3.5
GND		3N1	14	11						3.5
+24V		3N1	15	12						3.5
room temperature		3N1	16	13						3.5
GND		3N1	17	14						3.5
out side temperature		3N1	18	15						3.6
GND		3N1	17	16						3.6
status signal on				17			3N1	24		3.3
				18			3N1	25		3.4
A-alarm				19			3N1	30		3.5
A-Alarm				20			3N1	31		3.5

Changes | Date | Name | Norm | Date 17.11.15 | Editor WXP | Tested 17.11.15

drawer MSR 400AC X-Cube
C/R (L)/P/2400/3600

Original | Sub. f. | Sub. b.

CUBE compact

X2

draw.-no.: 12-1004

= | + | P. 7 | 9 P.

WUP1005D/08. Apr. 1992

6 8

Bill of materials

WUP0001E 01.03.1994

Item designation	Amount	Designation	Type number	Supplier	Article number
Hardware:					
drawer steel plate	1	1		TROX	
X-Cube Control Master	1	3N1		TROX	A00000027516
transformer PWR	1	1T1		TROX	A00000027522
Mod-Bus cable connector	1	2N2		TROX	A00000027528
plug sensor	1	2X1		Wieland	GST1513S
plug supply pipe	1	1X1		Wieland	76.352.0736.0
circuit breaker 3po.C16A	1	1F1		Siemens	5SY4316-7
safty clip	1	1F2		Weidmüller GmbH & Co.	ASK 1/35
micro fuse 2,5A T 5x20mm	1	1F2		Sonepar	
DIN rail TS35	50cm			Licatec	
cable 5x1.5mm²	60cm	cable supply pipe		Sonepar	YSLY-JZ 3x1,5mm²
cable duct 20x60mm	75cm			Licatec	
snap in clamp	1			OBO	2105 012
AWV Modular-Stecker	6			Sonepar	1290053
telefoncabel 6-core flat	120cm			Sonepar	1209571
raised head screw 4x20mm	4			van Beusekom	
raised head screw 4x4mm	15			van Beusekom	
network cable 1,5m	1			Sonepar	

			Date	12.10.12	drawer MSR 400AC X-Cube C/R (L)/P/2400/3600	CUBE compact	bill of materials part 1	draw.-no.: 12-1004	=
			Editor	JK					+
			Tested	17.11.15					P. 8
Changes	Date	Name	Norm		Original	Sub.f.	Sub.b.		9 P.

Bill of materials

WUP0001E 01.03.1994

Item designation	Amount	Designation	Type number	Supplier	Article number
terminal-material:					
terninal stop	2	X1/X2		Wago	249-117
PE-terminal 2,5mm²	2	X1/X2		Wago	280-907
terminal 2,5mm² grey	5	X1		Wago	280-901
double deck terminal 2,5mm grey	10	X2		Wago	870-501
cover plate double deck terminal	1	X2		Wago	870-518
double deck terminal PE pluggable	1	X2		Wago	870-107
double deck terminal grey pluggable	2	X2		Wago	870-101
cover plate pluggable	1	X1		Wago	870-118
endmodul 45° pluggable PE	2	X1		Wago	769-515
middlemodul 45° pluggable grey	4	X1		Wago	769-513
startmodul 45° pluggable grey	2	X1		Wago	769-512
WBS- terminal name 1-10	2	X1/X2		Wago	793-5599
terminal bridge	1	X2		Wago	870-402

8

G Circuit diagram tray 400 V AC-RHE

TROX TECHNIK
The art of handling air

TROX GmbH

Heinrich-Trox-Platz
47504 Neukirchen-Vluyn
E-Mail: trox@trox.de, Internet: www.trox.de

Customer :
Type : drawer MSR 400VAC X-Cube C/R (L)/R/2000/3000/4200/5200
Project name :

Manufacturer (Firm) : TROX
File name (\EPLAN4\P)
Project name : X-CUBE 400E

:
:
:
:

Index. 00-11/15

Created on : 16.10.12 by : JK
Processed on : 17.11.15 by : JK

Highest Page No. : 9
No. of pages : 13

Page overview

ESSJ001E

Page	Designation	Additional field	Date	Revisor
0.1	cover page		19.07.13	JK
0.2	page overview		23.07.13	JK
0.3	drawer design		19.07.13	JK
1	main supply		19.07.13	JK
2	VVX-Controller, Cable-Adapter		19.07.13	JK
3	X-Cube control Master		19.07.13	JK
3.1	X-Cube control Master example sample-wiring		19.07.13	JK
4	X-Cube I/O FAN Modul/ fresh air ventilator		19.07.13	JK
5	X-Cube I/O FAN Modul/ extracted air ventilator		19.07.13	JK
6	terminal X1		19.07.13	JK
7	terminal X2		19.07.13	JK
8	bill of materials part 1		23.07.13	JK
9	bill of materials part 2		23.07.13	JK

			Date	12.10.12	drawer MSR 400AC X-Cube C/R (L)/R/2000/3000/4200/5200	CUBE compact	page overview	draw.-No.: 12-1002
			Editor	JK				
			Tested	17.11.15				P. 0.2
Changes	Date	Name	Norm		Original	Sub. f.	Sub. b.	9 P.

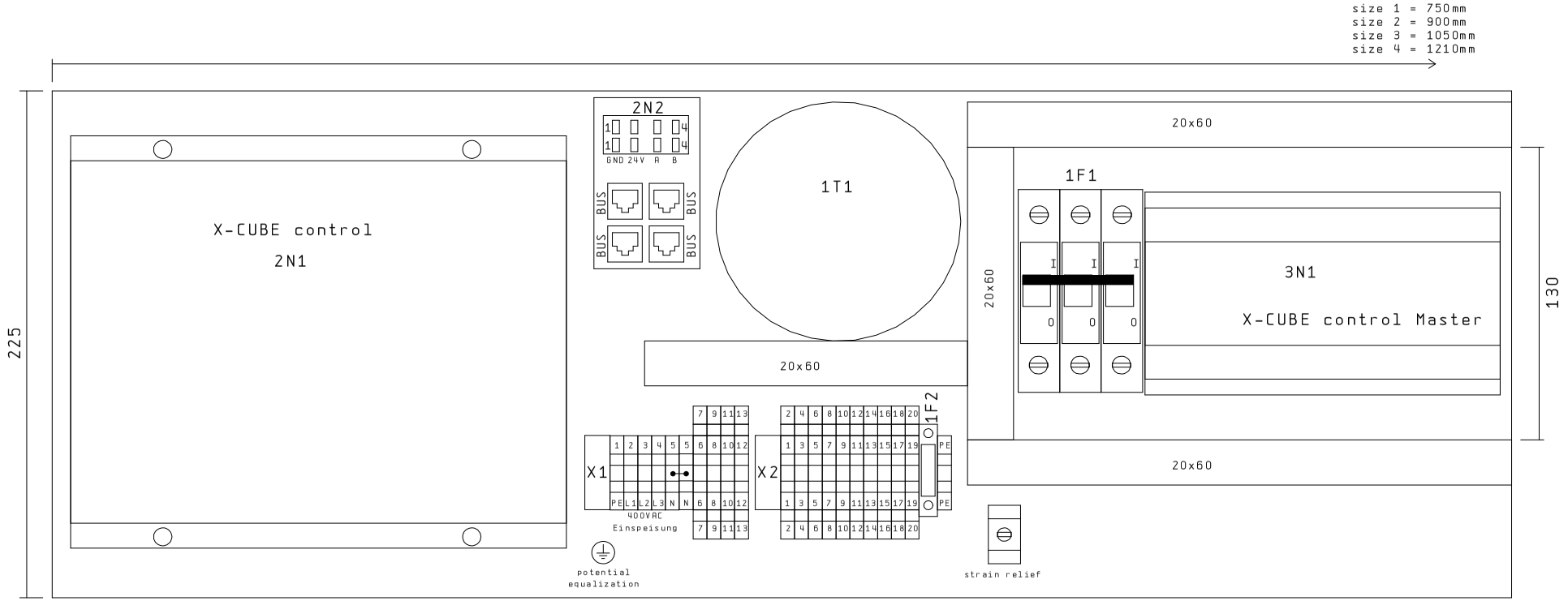

0.2

1

			Date	12.10.12	drawer MSR 400AC X-Cube C/R (L)/R/2000/3000/4200/5200		CUBE compact	drawer design	draw.-No.: 12-1002
			Editor	JK					
			Tested	17.11.15					P. 0.3
Changes	Date	Name	Norm		Original	Sub. f.	Sub. b.		9 P.

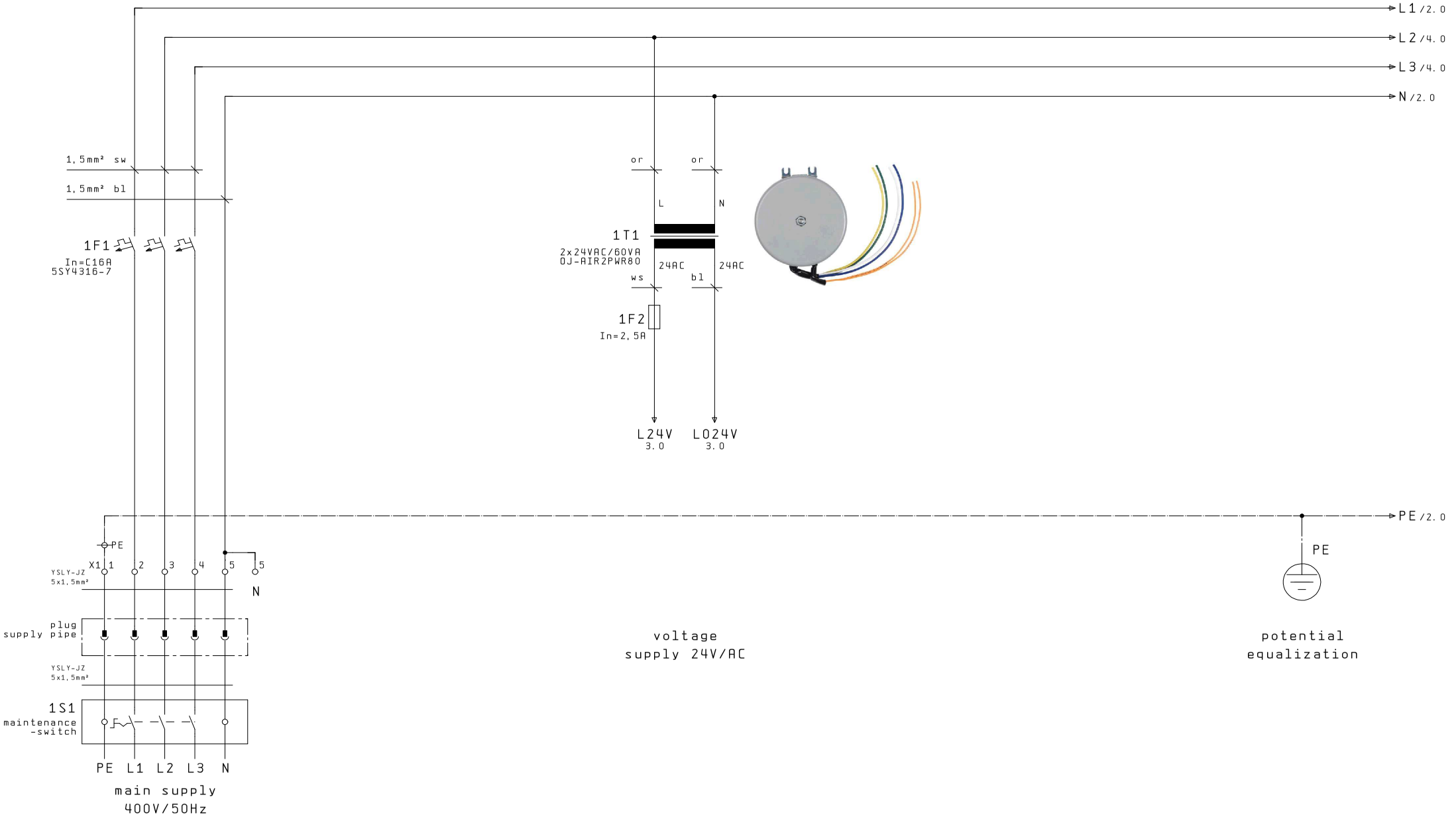

0.3

2

			Date	12.10.12	drawer MSR 400AC X-Cube C/R (L)/R/2000/3000/4200/5200	CUBE compact	main supply	draw.-No.: 12-1002
			Editor	JK				
			Tested	17.11.15				P. 1
Changes	Date	Name	Norm		Original	Sub. f.	Sub. b.	9 P.

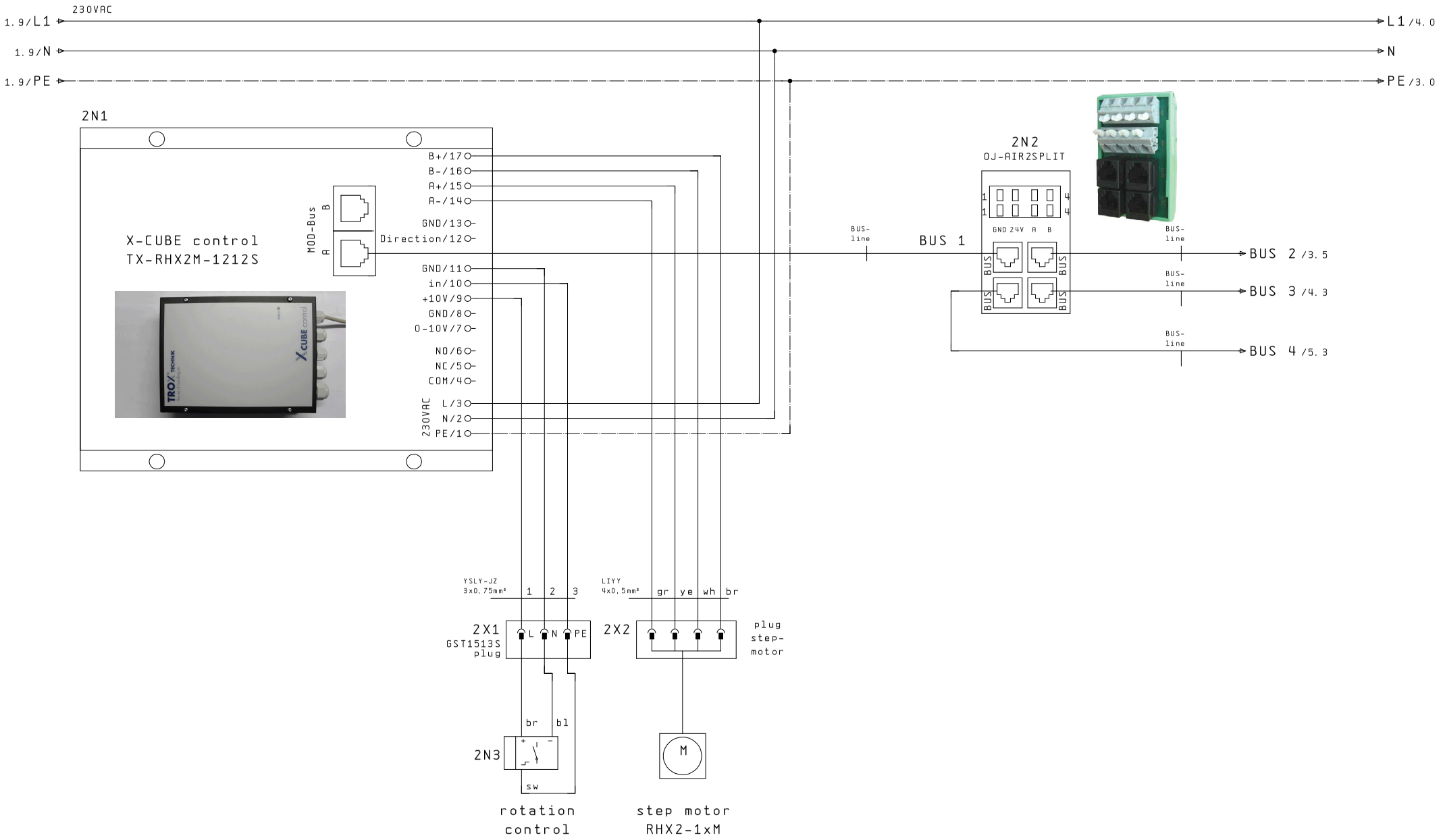

1 3

			Date	12.10.12	drawer MSR 400AC X-Cube C/R (L)/R/2000/3000/4200/5200	CUBE compact	VVX-Controller, Cable-Adapter	draw.-No.: 12-1002
			Editor	JK				
			Tested	17.11.15				P. 2
Changes	Date	Name	Norm		Original	Sub. f.	Sub. b.	9 P.

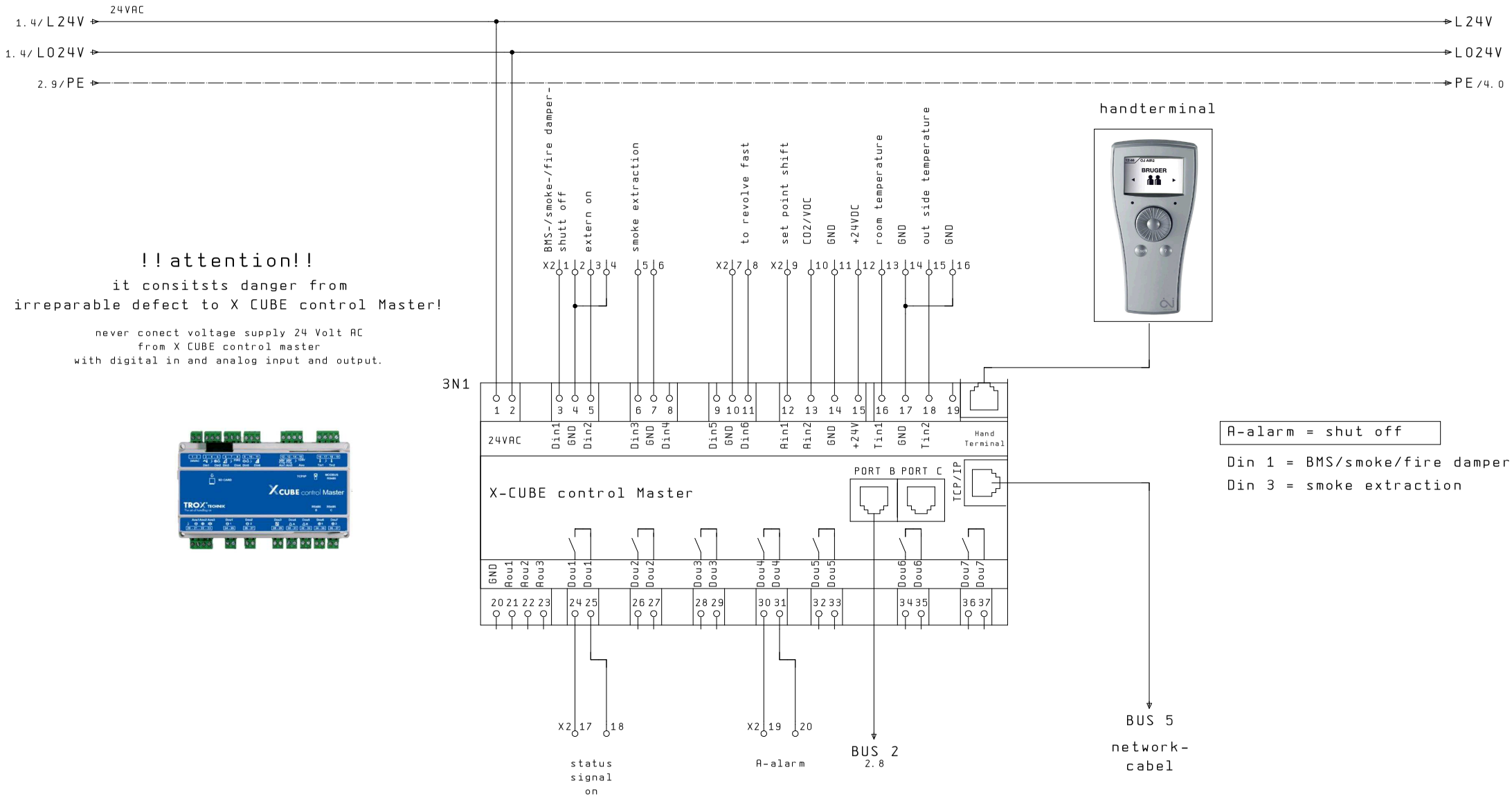

			Date	12.10.12	drawer MSR 400AC X-Cube C/R (L)/R/2000/3000/4200/5200	X CUBE compact	X-Cube control Master	draw.-No.: 12-1002
			Editor	JK				
			Tested	17.11.15				P. 3
Changes	Date	Name	Norm		Original	Sub. f.	Sub. b.	9 P.

example
sample-wiring

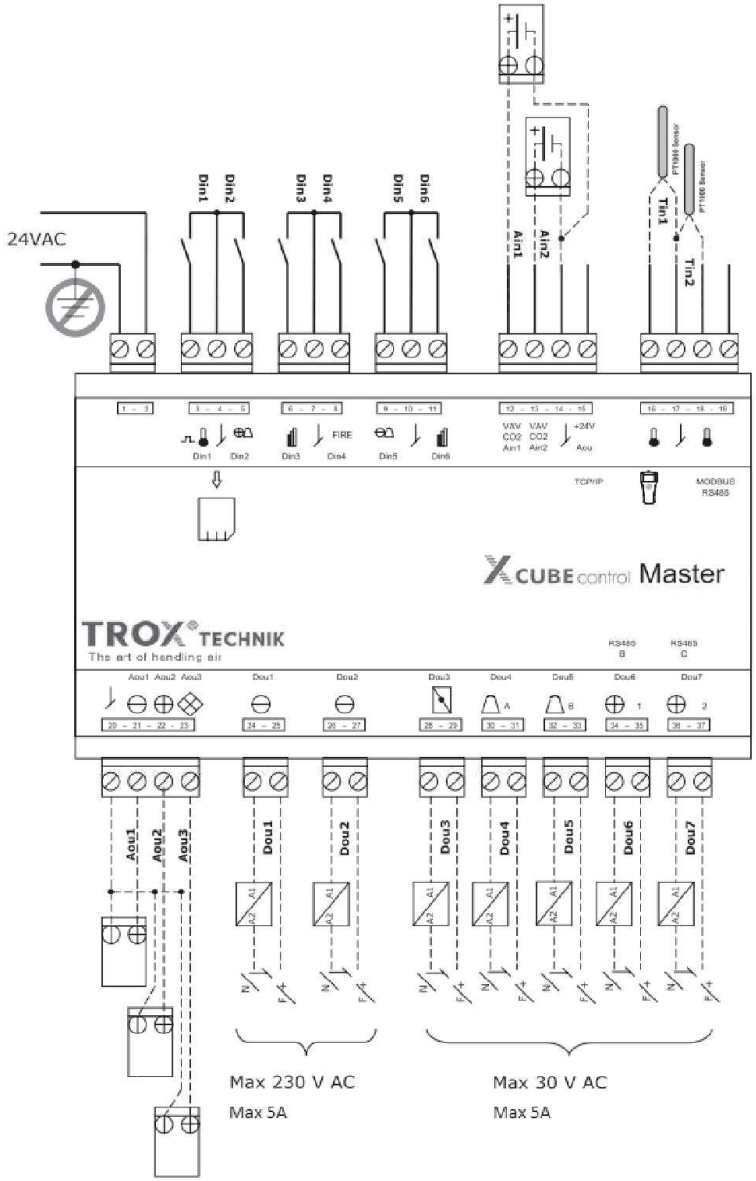

digital in

Din 1-6 to be
potential free connected

digital out

7-potential free out put
Dou 1&2 max. 230V/AC/DC max. 5A
Dou 3-7 max. 30V/AC/DC max. 5A

analog in

Ain 1&2 signal input range 0-10V
voltage supply 24VDC for
aktive sensor terminal 14 (GND)
terminal 15 (+24VDC)

analog out

Aou 1-3 signal out range 0-10V
common ground terminal 20 (GND)

			Date	22.03.13	drawer MSR 400AC X-Cube C/R (L)/R/2000/3000/4200/5200	X CUBE compact	X-Cube control Master example sample-wiring	draw.-No.: 12-1002
			Editor	JK				
			Tested	17.11.15				P. 3.1
Changes	Date	Name	Norm		Original	Sub. f.	Sub. b.	9 P.

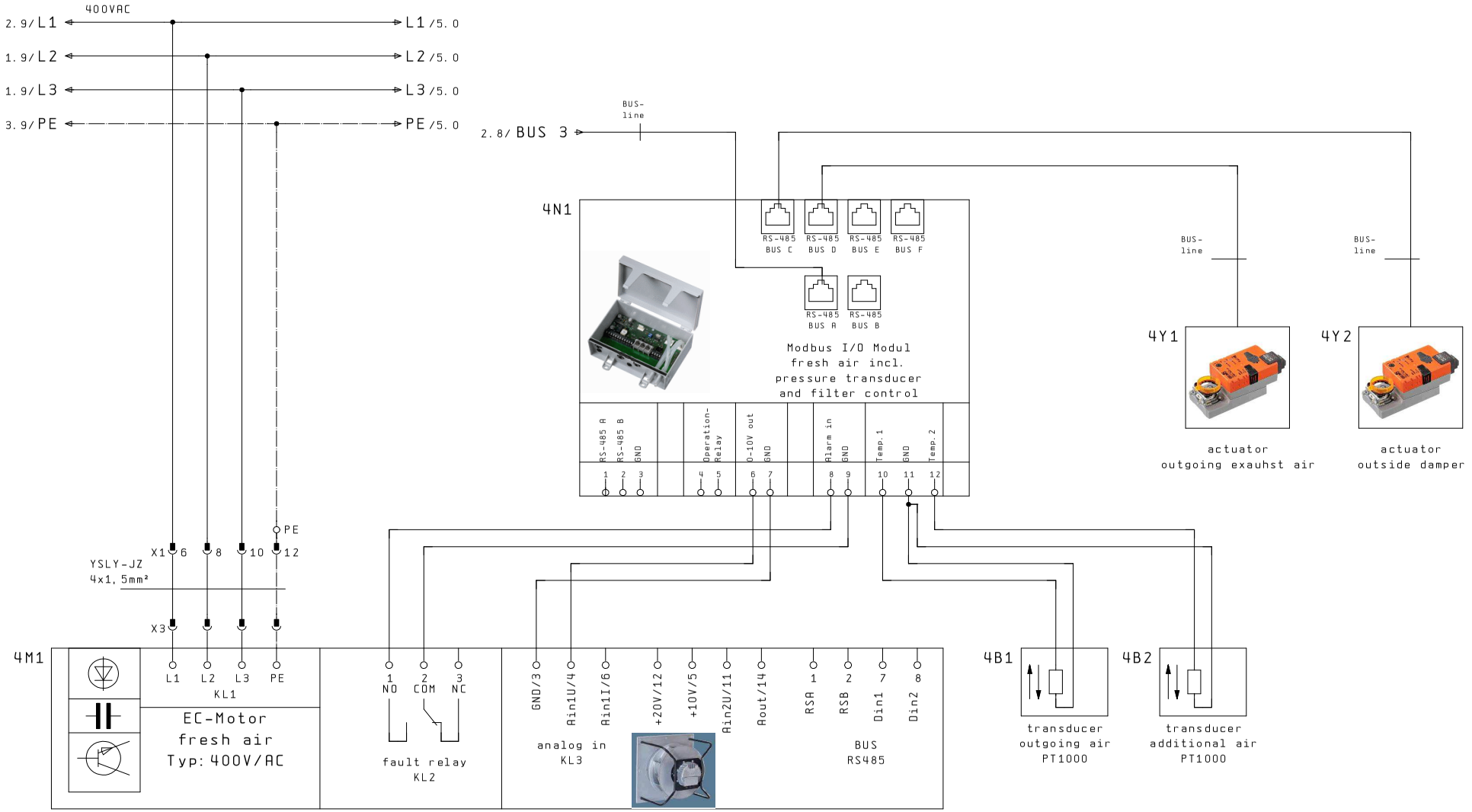

Typ:	Motor:	[kW]:	[A]:	K-level:
2000	084-GF	0,94	1,6	93
3000	112-GA	1,64	2,5	116
4200	112-GA	1,7	2,6	148
5200	150-FF	3	4,6	188

3.1

5

			Date	22.10.12	drawer MSR 400AC X-Cube C/R (L)/R/2000/3000/4200/5200	X CUBE compact	X-Cube I/O FAN Modul/ fresh air ventilator	draw.-No.: 12-1002
			Editor	JK				
			Tested	17.11.15				P. 4
Changes	Date	Name	Norm		Original	Sub. f.	Sub. b.	9 P.

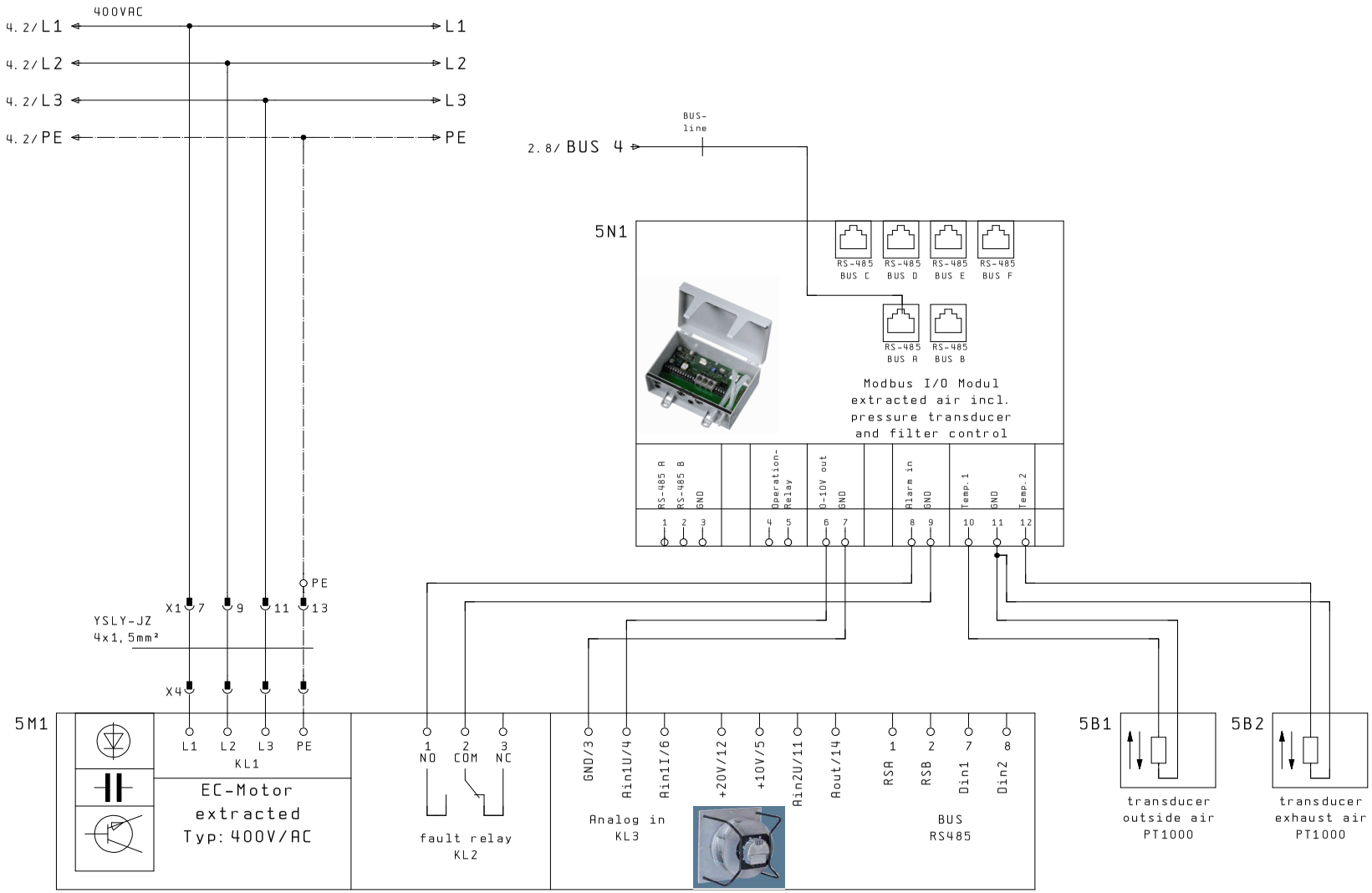

Typ:	Motor:	[kW]:	[A]:	K-level
2000	084-GF	0,94	1,6	93
3000	112-GA	1,64	2,5	116
4200	112-GA	1,7	2,6	148
5200	150-FF	3	4,6	188

			Date	22.10.12	drawer MSR 400AC X-Cube C/R (L)/R/2000/3000/4200/5200	X CUBE compact	X-Cube I/O FAN Modul/ extracted air ventilator	draw.-No.: 12-1002
			Editor	JK				
			Tested	17.11.15				
Changes	Date	Name	Norm		Original	Sub. f.	Sub. b.	P. 5 / 9 P.

Terminal strip designation

X1

Function	W2 YSLY-JZ 4x1.5mm²	W1 YSLY-JZ 4x1.5mm²	Cable designation / Cable type	Destination	Connection	Terminal number	Jumper	Terminal name	Destination	Connection	Cable designation / Cable type	1.5mm² bl	1.5mm² sw	Page / path
main supply PE						1			PE					1.0
main supply L1						2			1F1					1.1
main supply L2						3			1F1					1.1
main supply L3						4			1F1					1.1
Einspeisung N						5	●		2N1	N/2		x		1.1
=						5	●							1.1
voltage supply fresh air motor L1		1		1M1	L1	6			1F1				x	1.3
voltage supply extracted air motor L1	1			1M2	L1	7			X1	6				1.3
voltage supply fresh air motor L2		2		1M1	L2	8			1F1				x	1.4
voltage supply extracted air motor L2	2			1M2	L2	9			X1	8				1.4
voltage supply fresh air motor L3		3		1M1	L3	10			1F1				x	1.5
voltage supply extracted air motor L3	3			1M2	L3	11			X1	10				1.5
voltage supply fresh air motor PE		PE		1M1	PE	12			PE					1.112:81
voltage supply extracted air motor PE	PE			1M2	PE	13			PE					1.116:81

Klemmleistenbezeichnung

X2

Funktionstexte	Kabelbezeichnung / Kabeltyp	Ziel-bezeich-nung	Anschluß	Klemmen-nummer	Brücken	Klemmen-name	Ziel-bezeich-nung	Anschluß	Kabelbezeichnung / Kabeltyp	Seite/ Pfad
BMS-/smoke-/fire dampershutt off		3N1	3	1						3.3
GND		3N1	4	2						3.3
extern on		3N1	5	3						3.3
GND		3N1	4	4						3.4
smoke extraction		3N1	6	5						3.4
GND		3N1	7	6						3.4
=		3N1	10	7						3.4
to revolve fast		3N1	11	8						3.4
set point shift		3N1	12	9						3.5
CO2 Sensor		3N1	13	10						3.5
GND		3N1	14	11						3.5
+24V		3N1	15	12						3.5
room temperature		3N1	16	13						3.5
GND		3N1	17	14						3.5
out side temperature		3N1	18	15						3.6
GND		3N1	17	16						3.6
status signal on				17			3N1	24		3.3
Betriebsmeldung				18			3N1	25		3.4
A-alarm				19			3N1	30		3.5
A-Alarm				20			3N1	31		3.5

Bill of materials

WUP0001E 01.03.1994

Item designation	Amount	Designation	Type number	Supplier	Article number
Hardware:					
drawer steel plate	1	1		TROX	
X-Cube Control Master	1	3N1		TROX	A00000027516
transformer PWR	1	1T1		TROX	A00000027522
WRG-controller	1	2N1		TROX	A00000027521
Mod-Bus cable connector	1	2N2		TROX	A00000027528
plug sensor	1	2X1		Wieland	GST1513S
plug supply pipe	1	1X1		Wieland	76.352.0736.0
circuit breaker 3po.C16A	1	1F1		Siemens	5SY4316-7
safty clip	1	1F2		Weidmüller GmbH & Co.	ASK 1/35
micro fuse 2,5A T 5x20mm	1	1F2		Sonepar	
DIN rail TS35	50cm			Licatec	
cable 5x1.5mm²	60cm	cable supply pipe		Sonepar	YSLY-JZ 3x1,5mm²
cable 3x0,75mm²	40cm	cable sensory		Sonepar	YSLY-JZ 3x0,75mm²
cable duct 20x60mm	75cm			Licatec	
snap in clamp	1			OBO	2105 012
AWV Modular-Stecker	6			Sonepar	1290053
telefoncabel 6-core flat	120cm			Sonepar	1209571
raised head screw 4x20mm	4			van Beusekom	
raised head screw 4x4mm	15			van Beusekom	
network cable 1,5m	1			Sonepar	

			Date	12.10.12	drawer MSR 400AC X-Cube C/R (L)/R/2000/3000/4200/5200	CUBE compact	bill of materials part 1	draw.-No.: 12-1002
			Editor	JK				
			Tested	17.11.15				P. 8
Changes	Date	Name	Norm		Original	Sub.f.	Sub.b.	9 P.

Bill of materials

WUP0001E 01.03.1994

Item designation	Amount	Designation	Type number	Supplier	Article number
terminal-material:					
terninal stop	2	X1/X2		Wago	249-117
PE-terminal 2,5mm²	2	X1/X2		Wago	280-907
terminal 2,5mm² grey	5	X1		Wago	280-901
double deck terminal 2,5mm grey	10	X2		Wago	870-501
cover plate double deck terminal	1	X2		Wago	870-518
double deck terminal PE pluggable	1	X2		Wago	870-107
double deck terminal grey pluggable	2	X2		Wago	870-101
cover plate pluggable	1	X1		Wago	870-118
endmodul 45° pluggable PE	2	X1		Wago	769-515
middlemodul 45° pluggable grey	4	X1		Wago	769-513
startmodul 45° pluggable grey	2	X1		Wago	769-512
WBS- terminal name 1-10	2	X1/X2		Wago	793-5599
terminal bridge	1	X2		Wago	870-402

8

			Date	12.10.12	drawer MSR 400AC X-Cube C/R (L)/R/2000/3000/4200/5200	CUBE compact	bill of materials part 2	draw.-No.: 12-1002	=
			Editor	JK					+
			Tested	17.11.15					P. 9
Changes	Date	Name	Norm		Original	Sub. f.	Sub. b.		9 P.

H Accessories for X-CUBE compact

Installation and commissioning manual GB/en

Accessories

for X-CUBE compact units

Read the instructions prior to performing any task!

TROX® TECHNIK
The art of handling air

TROX GmbH
Heinrich-Trox-Platz
47504 Neukirchen-Vluyn
Germany
Telephone: +49 2845 202-0
Fax: +49 2845 202-265
E-mail: trox@trox.de
Internet: www.troxtechnik.com

A00000052545, 2, GB/en
11/2015

© TROX GmbH 2015

TROX TECHNIK

Table of contents

1 Overview **4**

1.1 Compact units and standard components 4

1.2 Accessories 4

2 Setting the bus address for accessories **7**

3 Establishing the bus communication **8**

4 Deactivating accessories **11**

5 Connection diagrams **12**

5.1 XCC-CD-RA 12

5.2 XCC-CD-RD 13

5.3 XCC-HM 14

5.4 XCC-CM 16

5.5 XCC-HCM 18

5.6 XCC-EHD for R/1300, R/2000 and P/1230 20

5.7 XCC-EHD for R/3000, R/4200, R/5250, P/1800, P/2400 and P/3600 22

5.8 XCC-CPC 24

5.9 XCC-LON 25

1 Overview

1.1 Compact units and standard components

Image	Code	Description
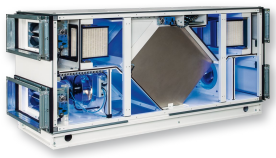	X-CUBE-C-R(L)-P/xxxx	X-CUBE compact with counter flow plate heat exchanger
	X-CUBE-C-R(L)-R/xxxx	X-CUBE compact with rotary heat exchanger
	XCC-ST	Hand-held control unit
		Modbus connecting cable (RJ12)

1.2 Accessories

Image	Code	Description
	XCC-HM	Heating coil module including XCC-CB1 module
	XCC-HCM	Heating/cooling coil module (pumped warm water/pumped chilled water system) including XCC-CB2 module

TROX TECHNIK

Overview

Accessories

Image	Code	Description
	XCC-CB 1	Controls module with connections for: Heating coil module XCC-HM, heat exchanger, evaporator
	XCC-CB 2	Controls module with connections for: Heating/cooling coil module XCC-HCM, heater/steam humidifier module
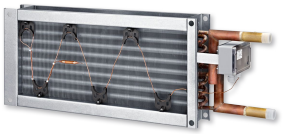	XCC-HD	Heating coil (pumped warm water system) for rectangular ducts, with integral capillary tube for frost protection
	XCC-EHD	Electric duct air heater for rectangular ducts
	XCC-CD-RA	Control panel, analog
	XCC-CD-RD	Control panel, digital
	XCC-S-...	Sensor ■ XCC-S-TD: Temperature sensor for ventilation ducts ■ XCC-S-CO2VOCD: Combined CO_2 / VOC sensor for ventilation ducts ■ XCC-S-TCO2HR: Room temperature, CO_2 (shown)

Overview

TROX TECHNIK

Accessories

Image	Code	Description
	XCC-LON	LON gateway
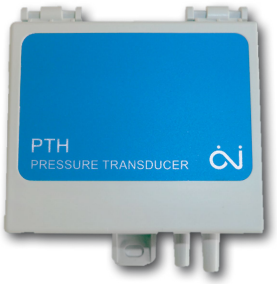	XCC-CPC	Parts kit for pressure-based control (constant pressure)
	XCC-P	Circulator pump
	XCC-V	Valve assembly for the hydraulic connection of heating and/or cooling coils

2 Setting the bus address for accessories

Fig. 1: Extension module

① Rotary button for setting the address

The extension module is an integral part of the controls module XCC-CB; the number of extension modules varies depending on the type of controls module:

XCC-CB1 - 1 extension module

XCC-CB2 - 2 extension modules

Address settings

Accessories	Controls module / type	Address	Supply voltage to be provided by others
Heating coil	XCC-CB-1	3	×
Cooling coil	XCC-CB-1	4	×
Heating coil / cooling coil	XCC-CB-2	Heating coil: 3 (extension module on the right)	×
		Cooling coil: 4 (extension module on the left)	
Electric duct air heater	XCC-EHD	5	×
Evaporator	-	7	×
Preheater (electric or pumped warm water)	XCC-CB-1/XCC-EHD	8	×
Constant pressure control	XCC-CPC	0 (supply air), 1 (extract air)	–
Digital control panel	XCC-CD-RD	is addressed using the control panel itself, see connection diagram *13*	–

3 Establishing the bus communication

Cable entries on the X-CUBE compact

Fig. 2: Cable entries below the main switch

① Main switch
② Bus connection, input/output
③ Bus connection, input/output
④ Interface for hand-held control unit
⑤ TCP/IP network interface
⑥ Fault messages etc.
⑦ Main connection of unit (voltage supply)
⑧ Signal line, e.g. for faults

Connecting the bus cable to the compact unit and to an accessory

Personnel:

- Skilled qualified electrician

DANGER!

For wiring the components, comply with the requirements and safety notes in the 'X-CUBE compact transport and installation manual'.

For more information on wiring refer to the electric wiring diagram for the compact unit.

Requirement: The compact unit and accessory have been installed and connected to the power supply network.

Switching off the power supply

DANGER!

Danger of electric shock! Do not touch any live components! Electrical equipment carries a dangerous electrical voltage.

– Only skilled qualified electricians are allowed to work on the electrical system.
– Switch off the power supply before working on any electrical equipment.

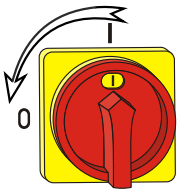

Fig. 3: Switching off the main switch

1. Move the main switch on the compact unit to 0/OFF.
2. Switch off the power supply on the accessory and secure it against being switched on again.

Connecting the communication cable

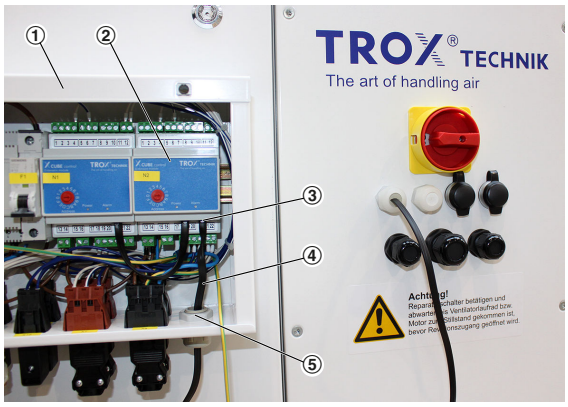

Fig. 4: Controls module

3. Open the cover of the controls module (Fig. 4/1) and set the address of the accessory on the extension module (Fig. 4/2) *on page 7*.

   Take the supplied bus connecting cable (RJ12, Fig. 4/4) and lead it through the penetration in the casing of the controls module (Fig. 4/5) into the controls module.

   Plug the bus connecting cable into the RJ12 socket (Fig. 4/3) on the extension module.

   For two extension modules (XCC-CB-2) it is sufficient to connect the bus cable only once with the control master since all extension modules are interconnected, and the signals are transmitted from one module to the next.

4. Close the cover of the controls module.

Fig. 5: Removing the electrical connections panel

5. Loosen the screws (Fig. 5/2) on the electrical connections panel (Fig. 5/1) and remove the panel.

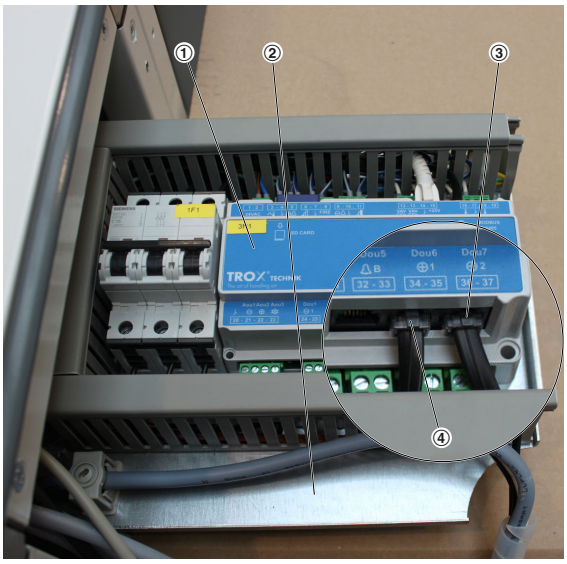

Fig. 6: X-CUBE control master

6. To connect the bus cable to the control master (Fig. 6/1), pull out the tray with the electrical components (Fig. 6/2).

   Lead the bus connection cable through the penetration (Fig. 2/2) in the panel and plug it into port C (RJ12 socket, Fig. 6/3) of the control master.

   If port C is already used, plug the connection cable into port B (RJ12 socket, Fig. 6/4).

   Lay the bus connection cable in such a way that it will not be damaged when you mount the panel again.

   Push the tray with the electronic components back into the unit.

7. Mount the electrical connections panel (Fig. 5/1).

Establishing the bus communication

TROX TECHNIK

Activating accessories

Fig. 7: Hand-held control unit

8. Use the supplied bus cable to connect the hand-held control unit to the corresponding input (Fig. 2/4).
9. Switch on the power supply for the accessory.

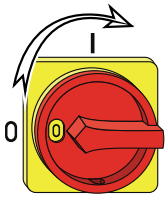

Fig. 8: Switching on the main switch

10. Move the main switch of the compact unit to I/ON

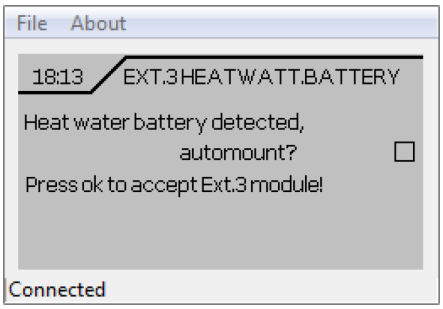

Fig. 9: Message displayed on the hand-held control unit

⇨ Use the hand-held control unit to activate accessories. For details on using the hand-held control unit, refer to the X-CUBE compact operating manual.

The unit recognises connected accessories automatically. After about 5 to 30 s a message appears on the hand-held control unit (Fig. 9 / example).

11. To activate the accessory, press OK.

⇨ Once an accessory has been activated, you can configure it. For details refer to the X-CUBE compact operating manual.

User passwords for the hand-held control unit

Level	Password
User	0001
Technician	0022
Service	0333

4 Deactivating accessories

Use the hand-held control unit to deactivate accessories. For details on using the hand-held control unit, refer to the X-CUBE compact operating manual.

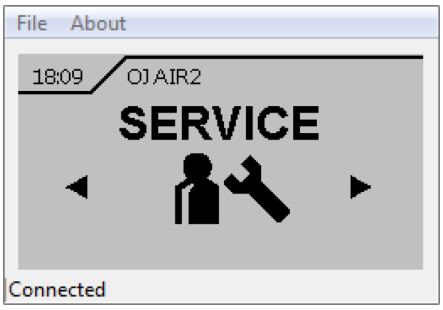

Fig. 10: Service main menu

1. Use the selector on the hand-held control unit to navigate to Service (Fig. 10); confirm your selection by pressing OK.

   Service requires a password. If you have not yet entered the password, enter it. Only expert users are allowed to set Service parameters. For passwords see table *on page 8*

   ⇨ Once you have entered the password, the Fan submenu appears.

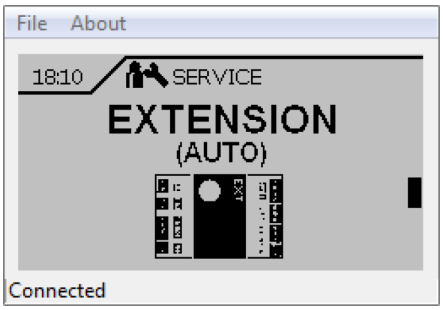

Fig. 11: Extension submenu

2. Use the selector on the hand-held control unit to select the Extension menu; confirm your selection by pressing OK. Now use the selector to navigate to the accessory to be deactivated, see Fig. 12.

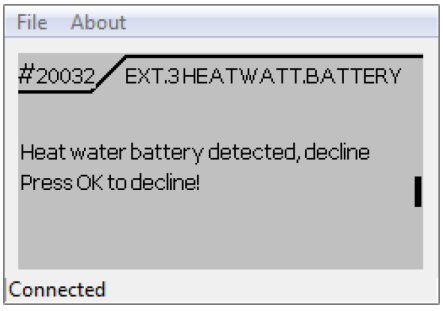

Fig. 12: Message (example)

3. Press OK to deactivate the accessory.

   ⇨ The accessory is now no longer active.

   To return to the previous (higher) menu level, press Esc.

Connection diagrams

TROX TECHNIK

XCC-CD-RA

5 Connection diagrams

5.1 XCC-CD-RA

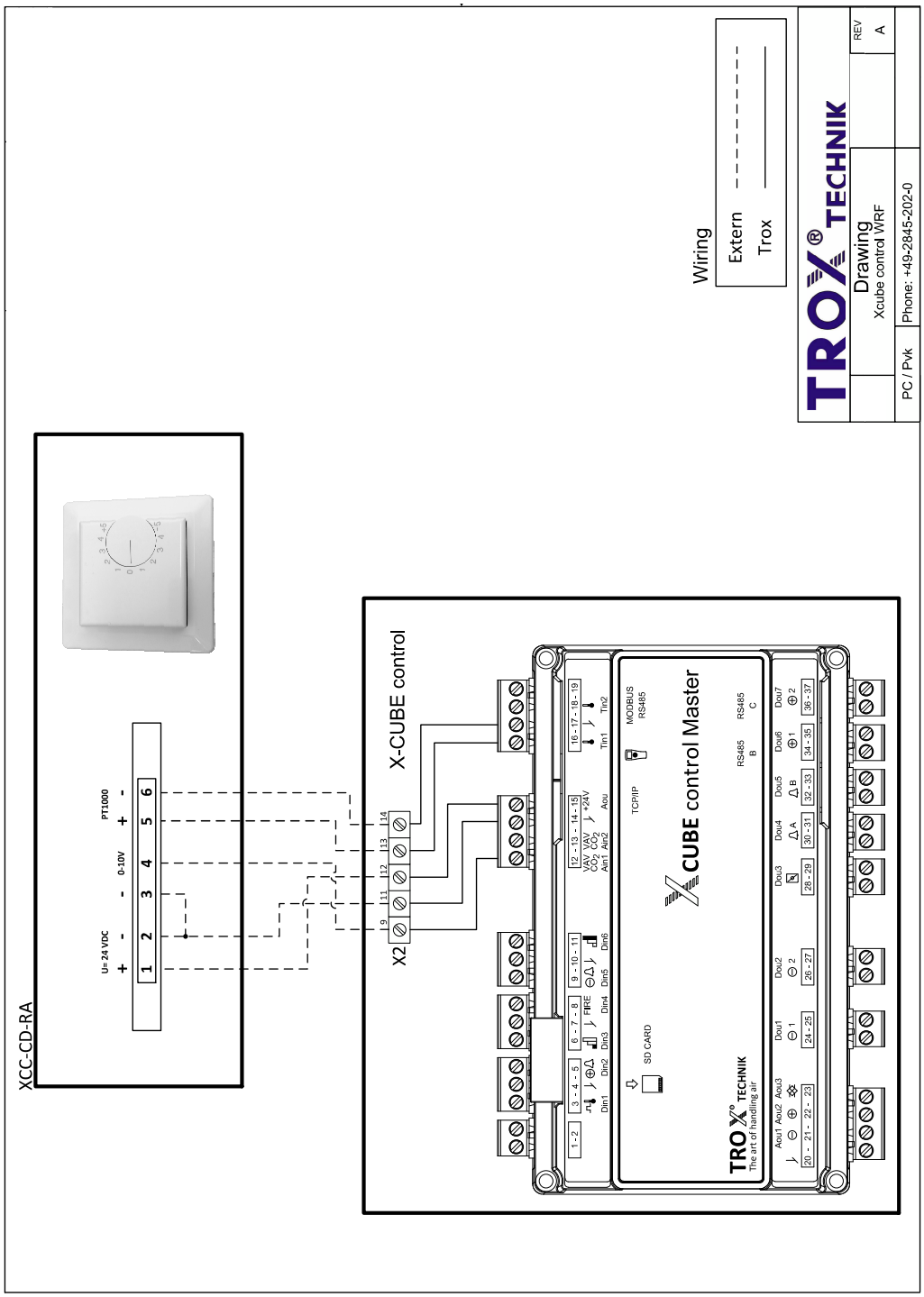

5.2 XCC-CD-RD

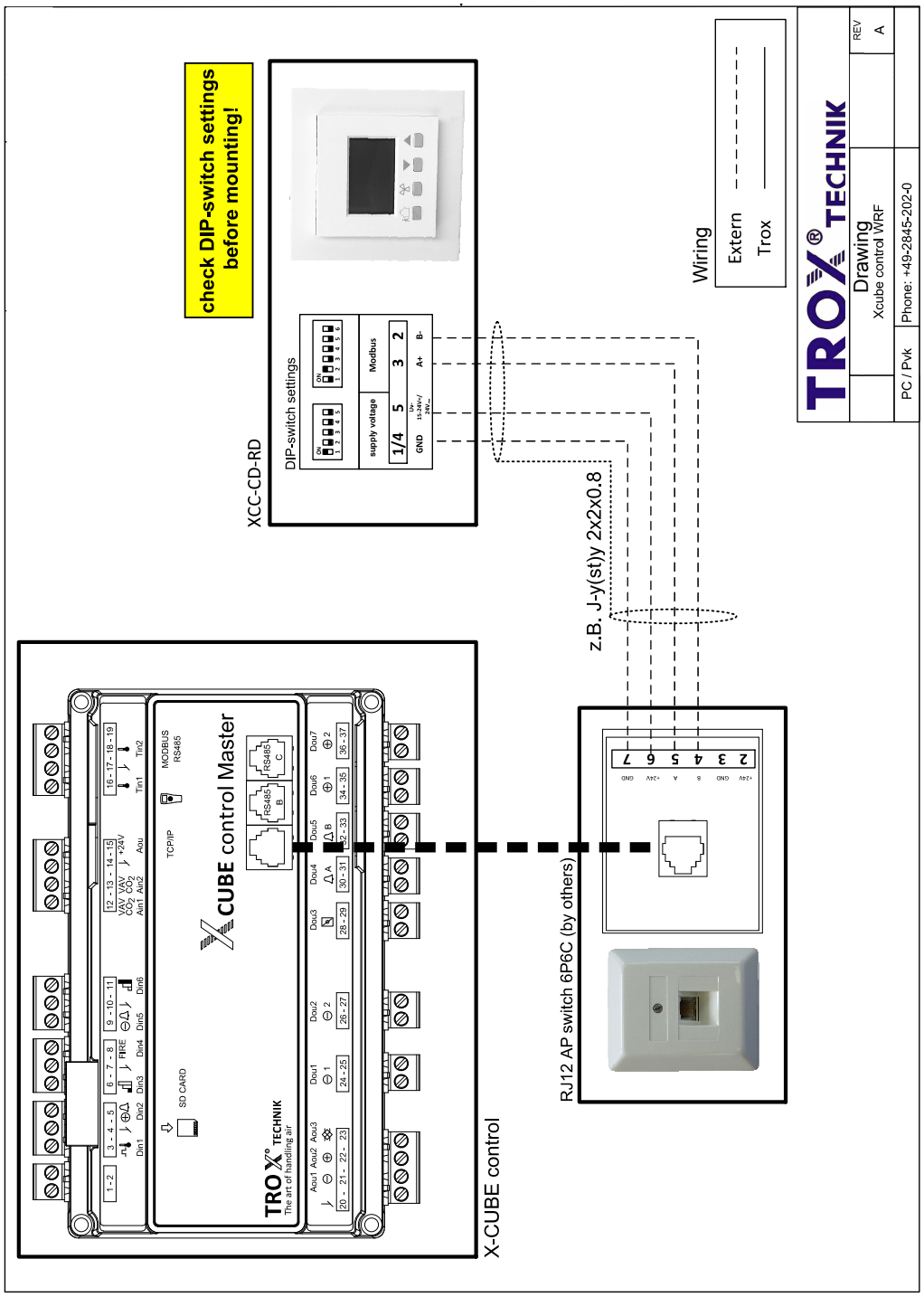
check DIP-switch settings before mounting!
XCC-CD-RD
DIP-switch settings
supply voltage
Modbus
1/4 5 3 2
GND
A+
B-
Wiring
Extern
Trox
TROX TECHNIK
Drawing
Xcube control WRF
REV
A
PC / Pvk
Phone: +49-2845-202-0
z.B. J-y(st)y 2x2x0.8
RJ12 AP switch 6P6C (by others)
X-CUBE control
X-CUBE control Master
TROX TECHNIK
The art of handling air
SD CARD
TCP/IP
MODBUS RS485

Connection diagrams

XCC-HM

5.3 XCC-HM

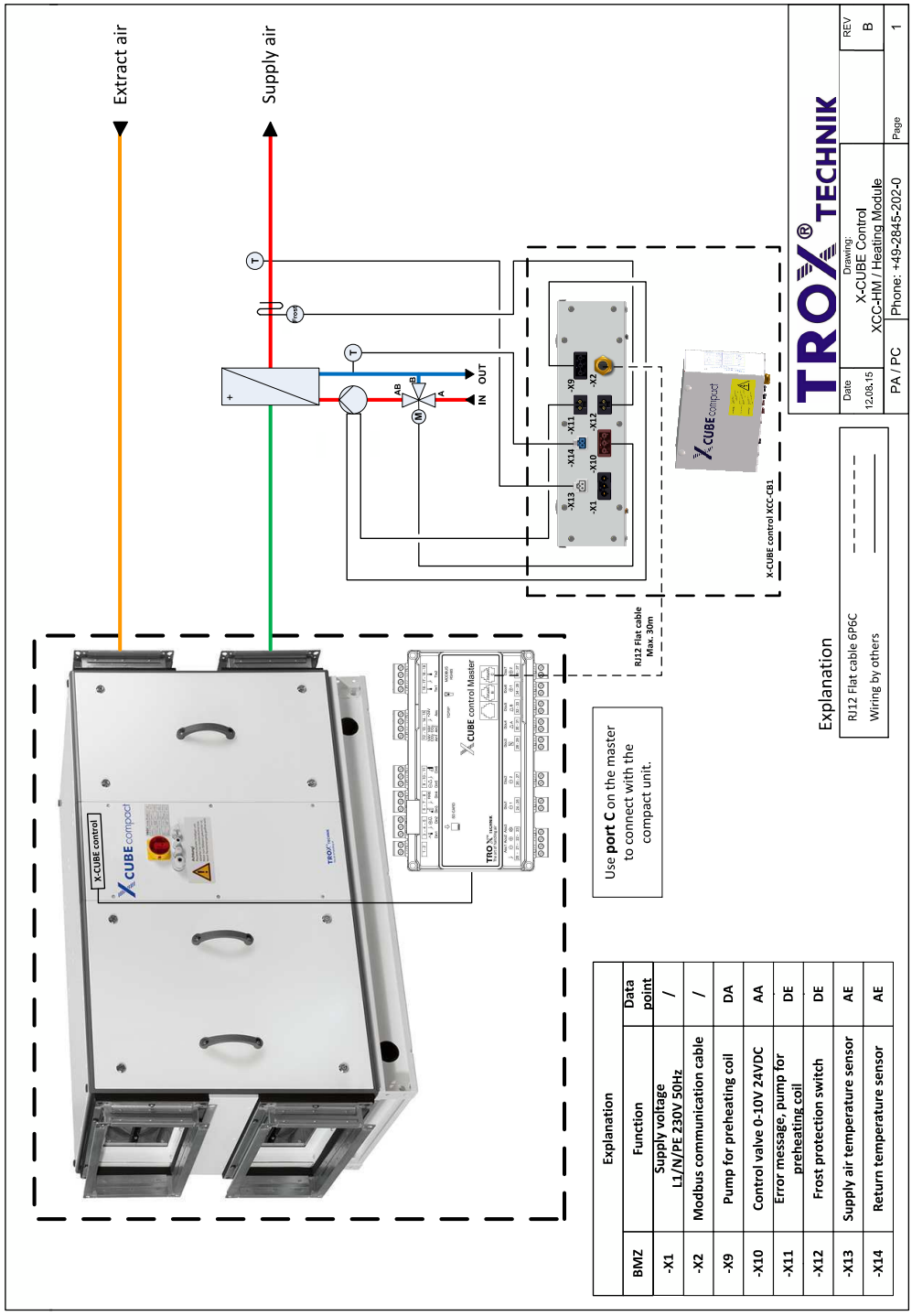

Explanation		
BMZ	Function	Data point
-X1	Supply voltage L1/N/PE 230V 50Hz	/
-X2	Modbus communication cable	/
-X9	Pump for preheating coil	DA
-X10	Control valve 0-10V 24VDC	AA
-X11	Error message, pump for preheating coil	DE
-X12	Frost protection switch	DE
-X13	Supply air temperature sensor	AE
-X14	Return temperature sensor	AE

TROX TECHNIK

Connection diagrams

XCC-HM

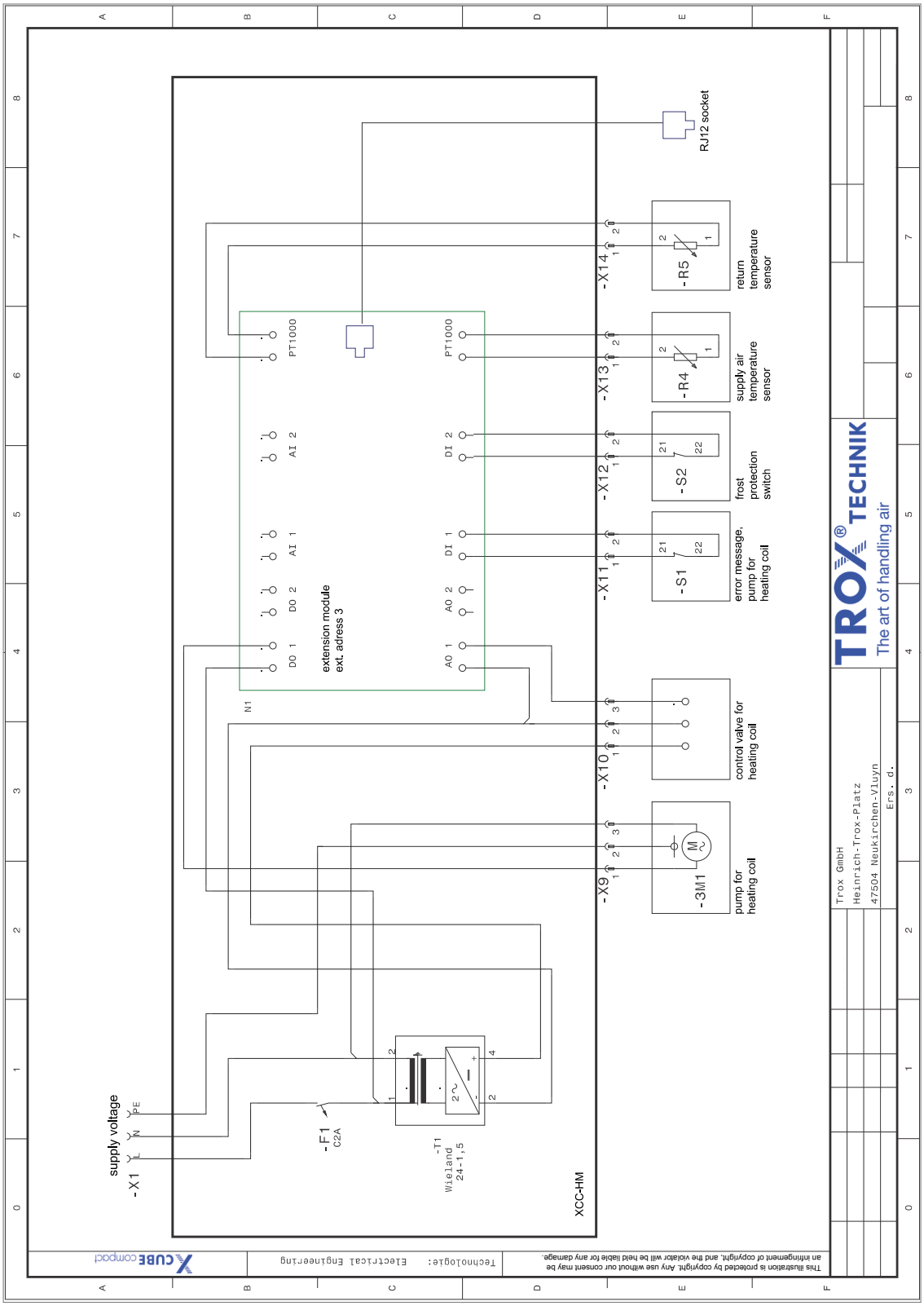

Connection diagrams

TROX® TECHNIK

XCC-CM

5.4 XCC-CM

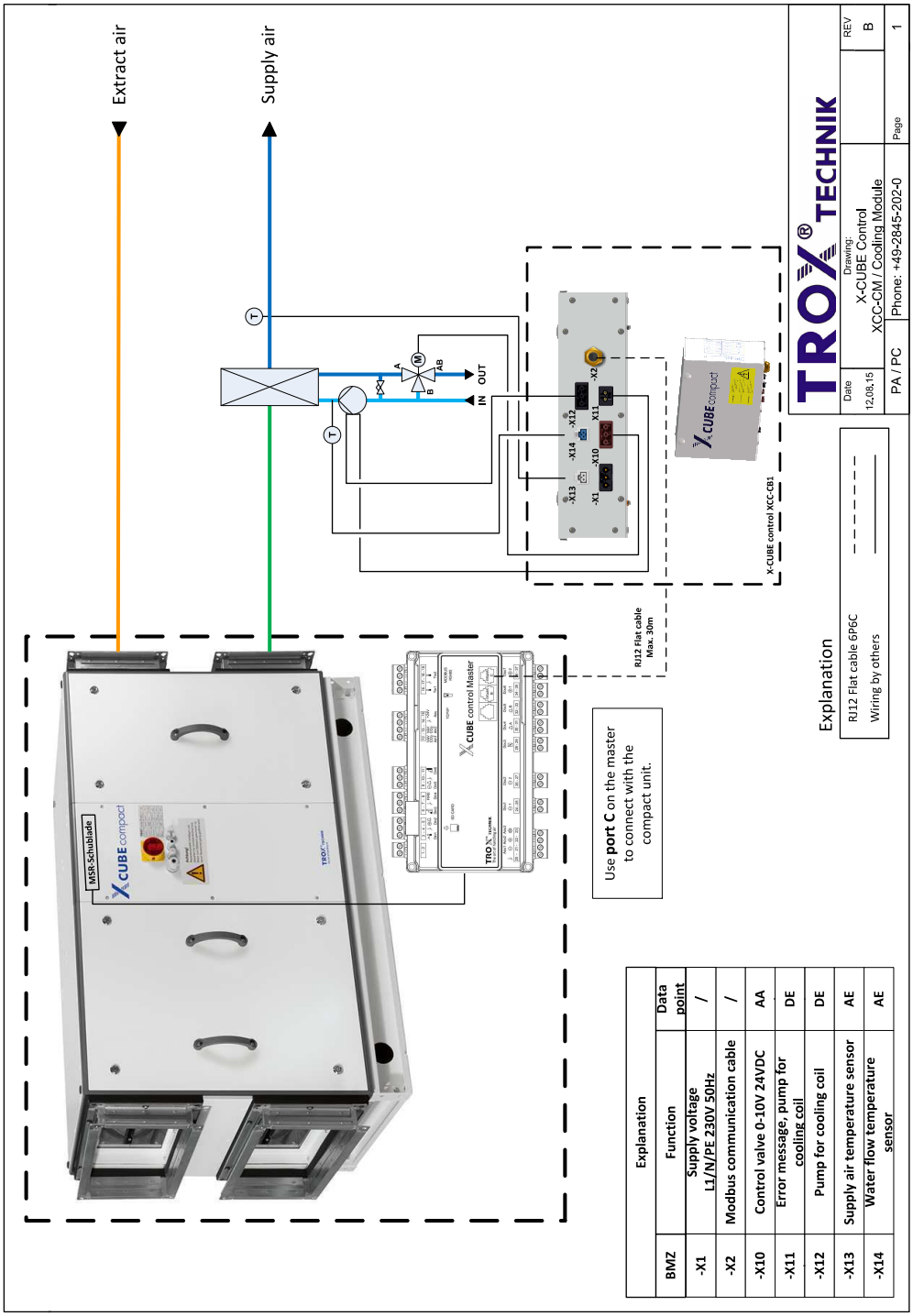

BMZ	Explanation Function	Data point
-X1	Supply voltage L1/N/PE 230V 50Hz	/
-X2	Modbus communication cable	/
-X10	Control valve 0-10V 24VDC	AA
-X11	Error message, pump for cooling coil	DE
-X12	Pump for cooling coil	DE
-X13	Supply air temperature sensor	AE
-X14	Water flow temperature sensor	AE

TROX TECHNIK

Connection diagrams

XCC-CM

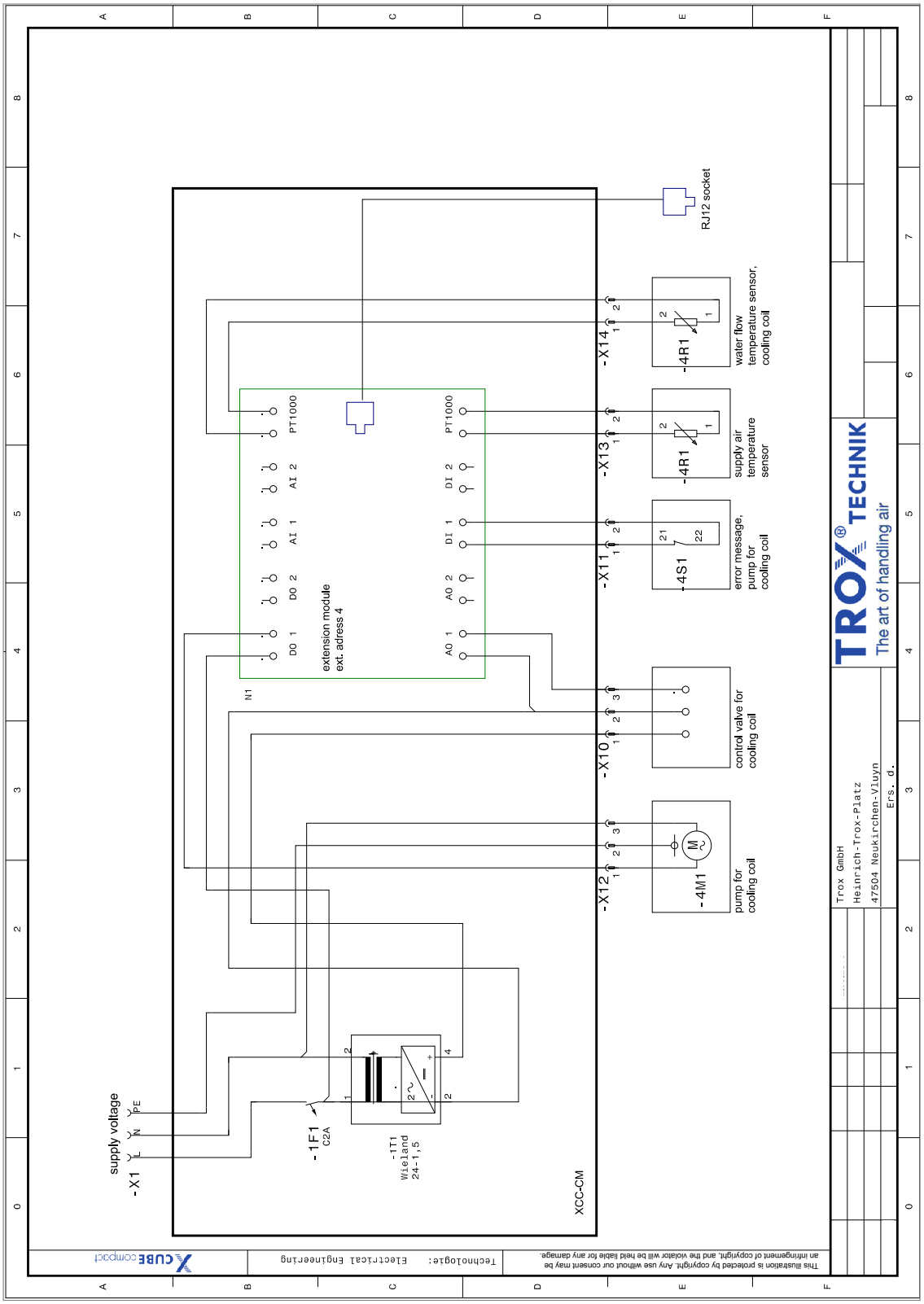

Connection diagrams

TROX® TECHNIK

XCC-HCM

5.5 XCC-HCM

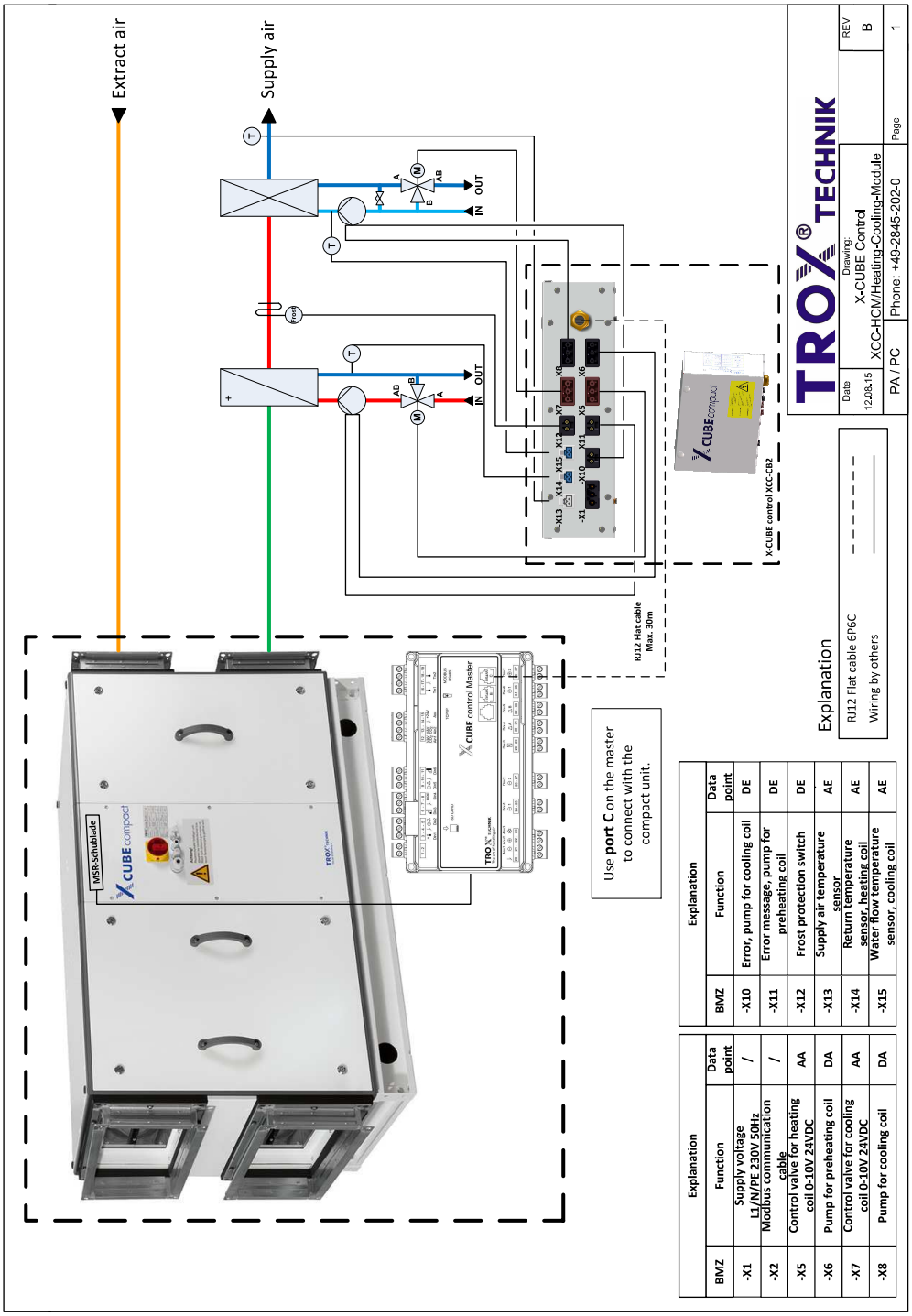

Explanation		
BMZ	Function	Data point
-X1	Supply voltage L1/N/PE 230V 50Hz	/
-X2	Modbus communication cable	/
-X5	Control valve for heating coil 0-10V 24VDC	AA
-X6	Pump for preheating coil	DA
-X7	Control valve for cooling coil 0-10V 24VDC	AA
-X8	Pump for cooling coil	DA

Explanation		
BMZ	Function	Data point
-X10	Error, pump for cooling coil	DE
-X11	Error message, pump for preheating coil	DE
-X12	Frost protection switch	DE
-X13	Supply air temperature sensor	AE
-X14	Return temperature sensor, heating coil	AE
-X15	Water flow temperature sensor, cooling coil	AE

TROX® TECHNIK

Connection diagrams

XCC-HCM

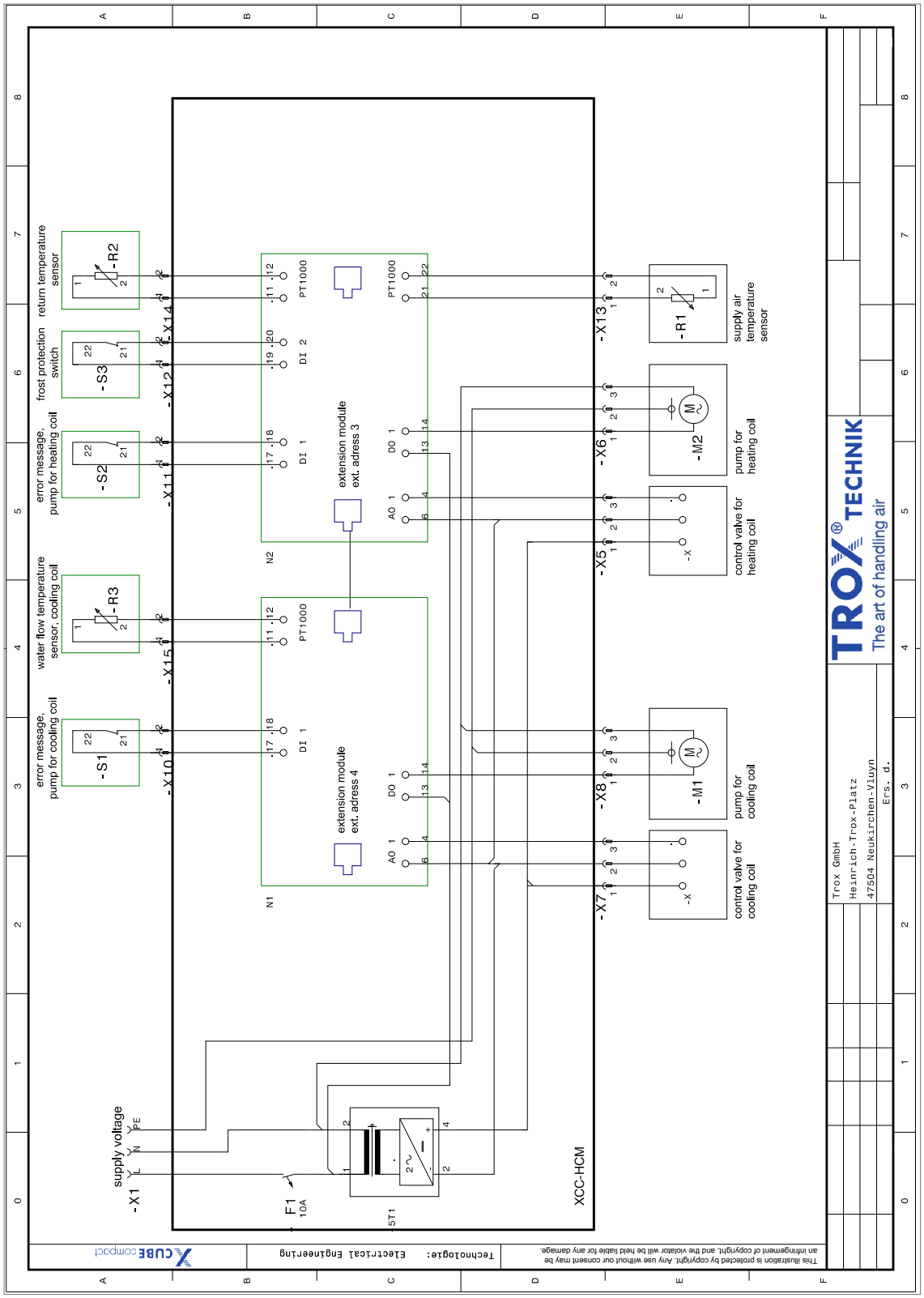

Connection diagrams

TROX® TECHNIK

XCC-EHD for R/1300, R/2000 and P/1230

5.6 XCC-EHD for R/1300, R/2000 and P/1230

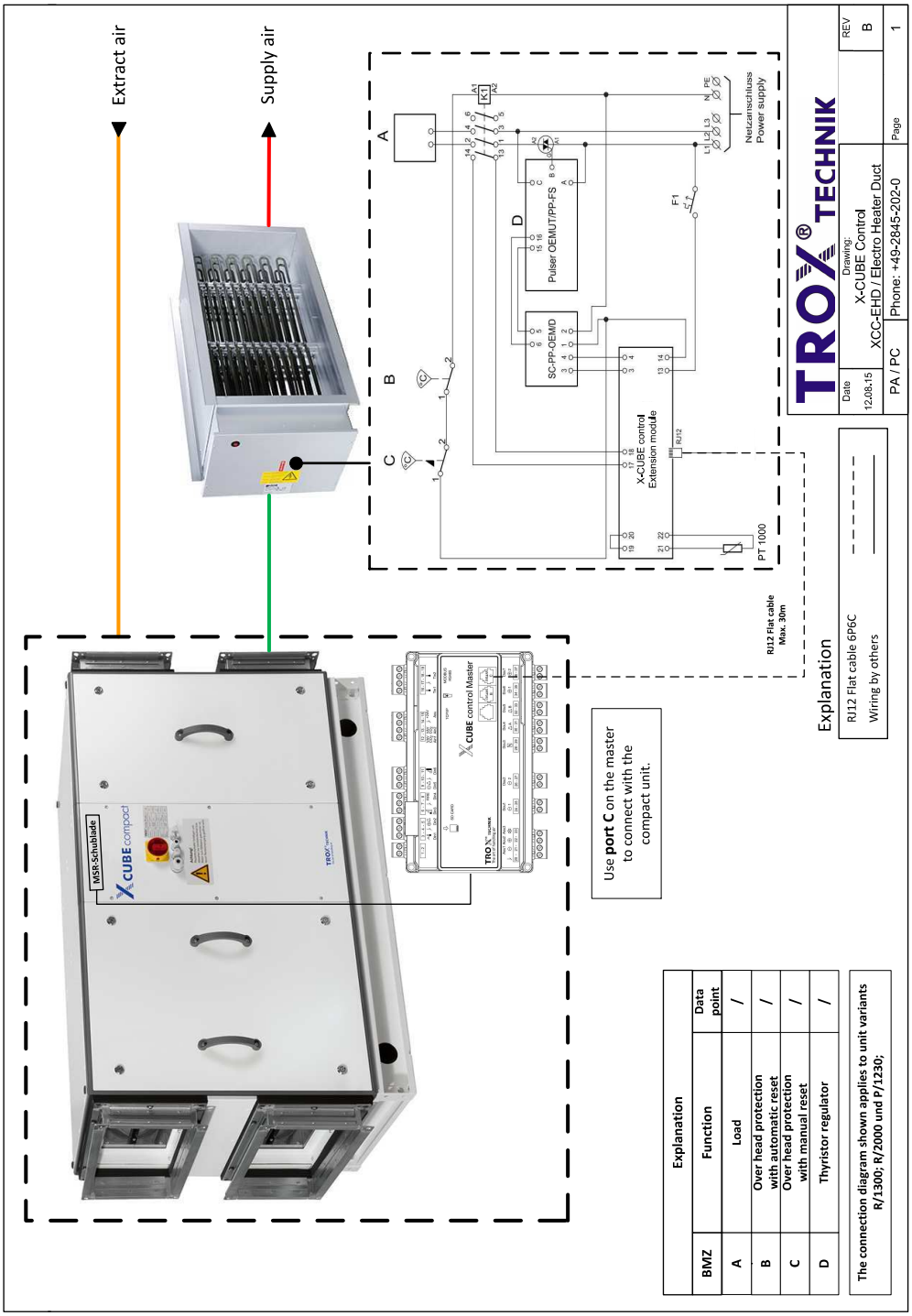

TROX TECHNIK

Connection diagrams

XCC-EHD for R/1300, R/2000 and P/1230

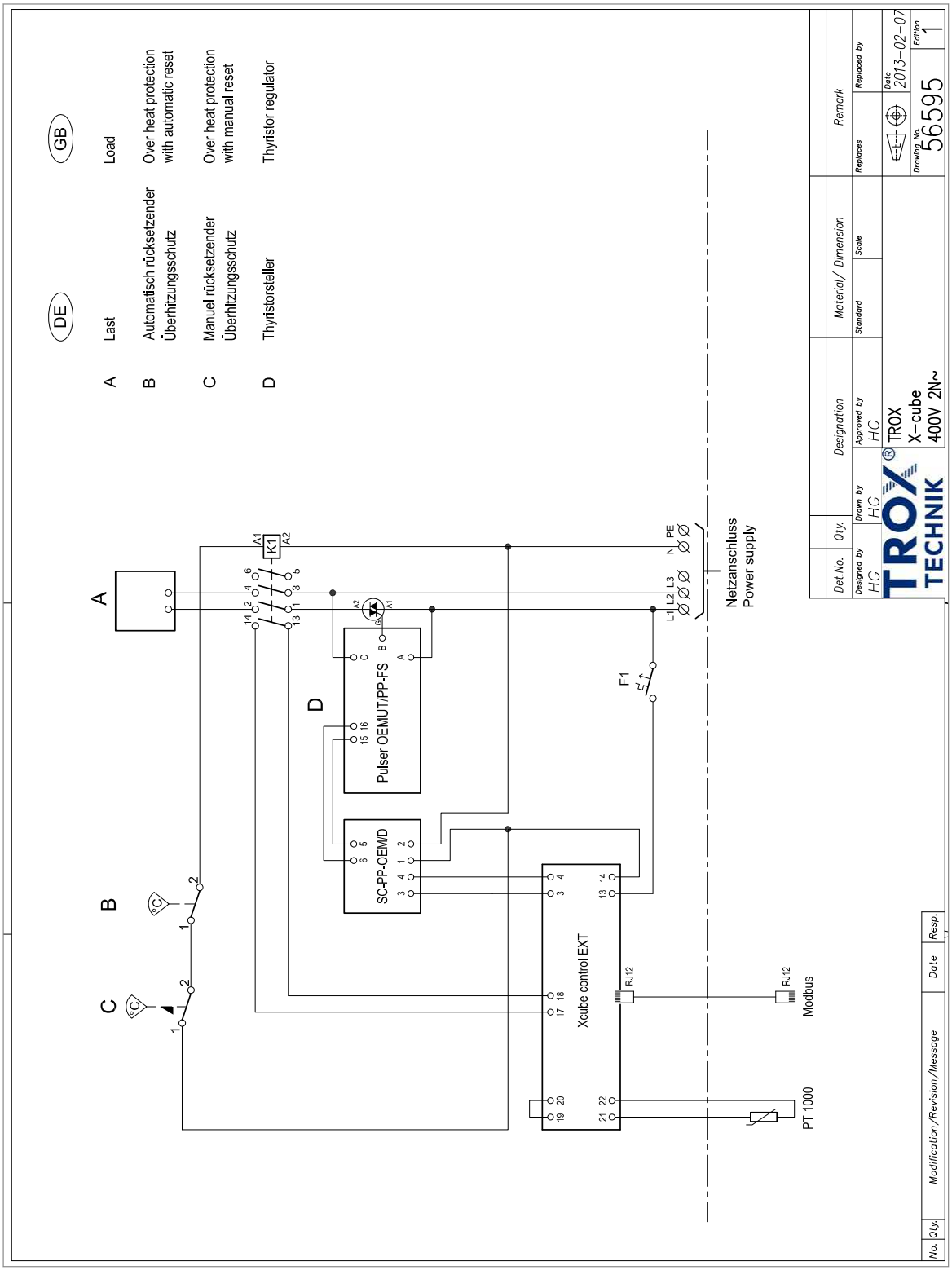

Connection diagrams

TROX® TECHNIK

XCC-EHD for R/3000, R/4200, R/5250, P/...

5.7 XCC-EHD for R/3000, R/4200, R/5250, P/1800, P/2400 and P/3600

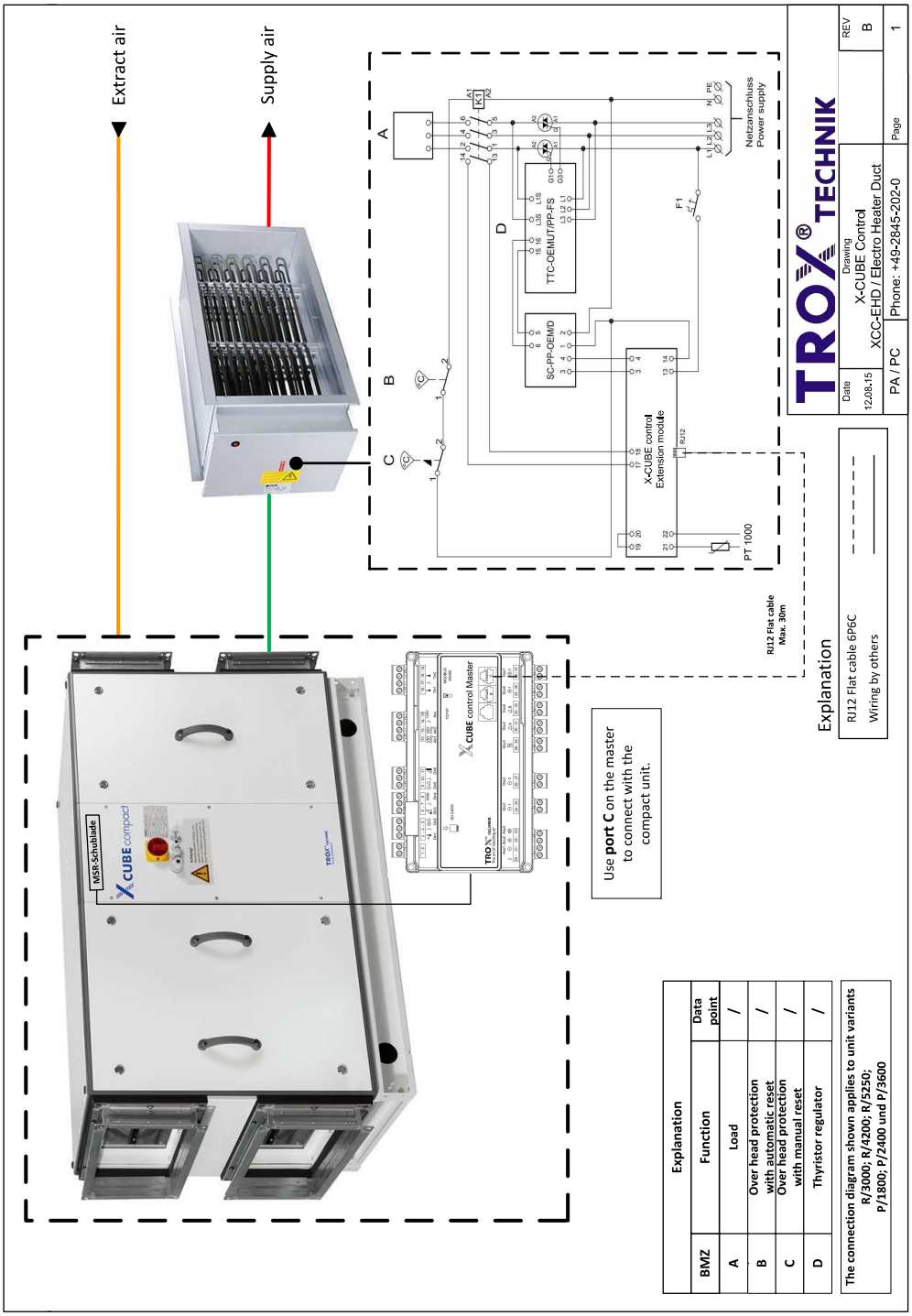

Connection diagrams

XCC-EHD for R/3000, R/4200, R/5250, P/...

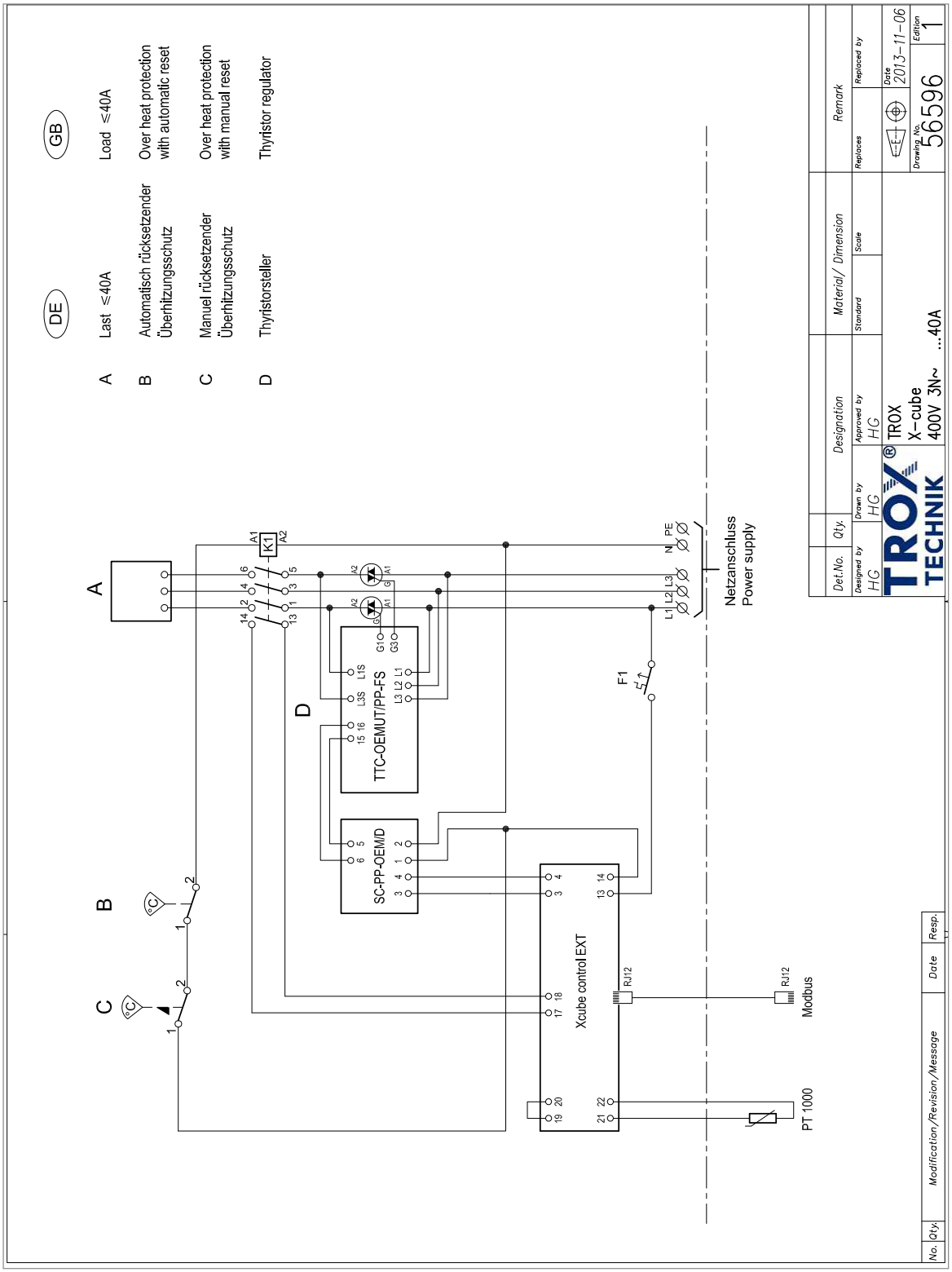

Connection diagrams

TROX® TECHNIK

XCC-CPC

5.8 XCC-CPC

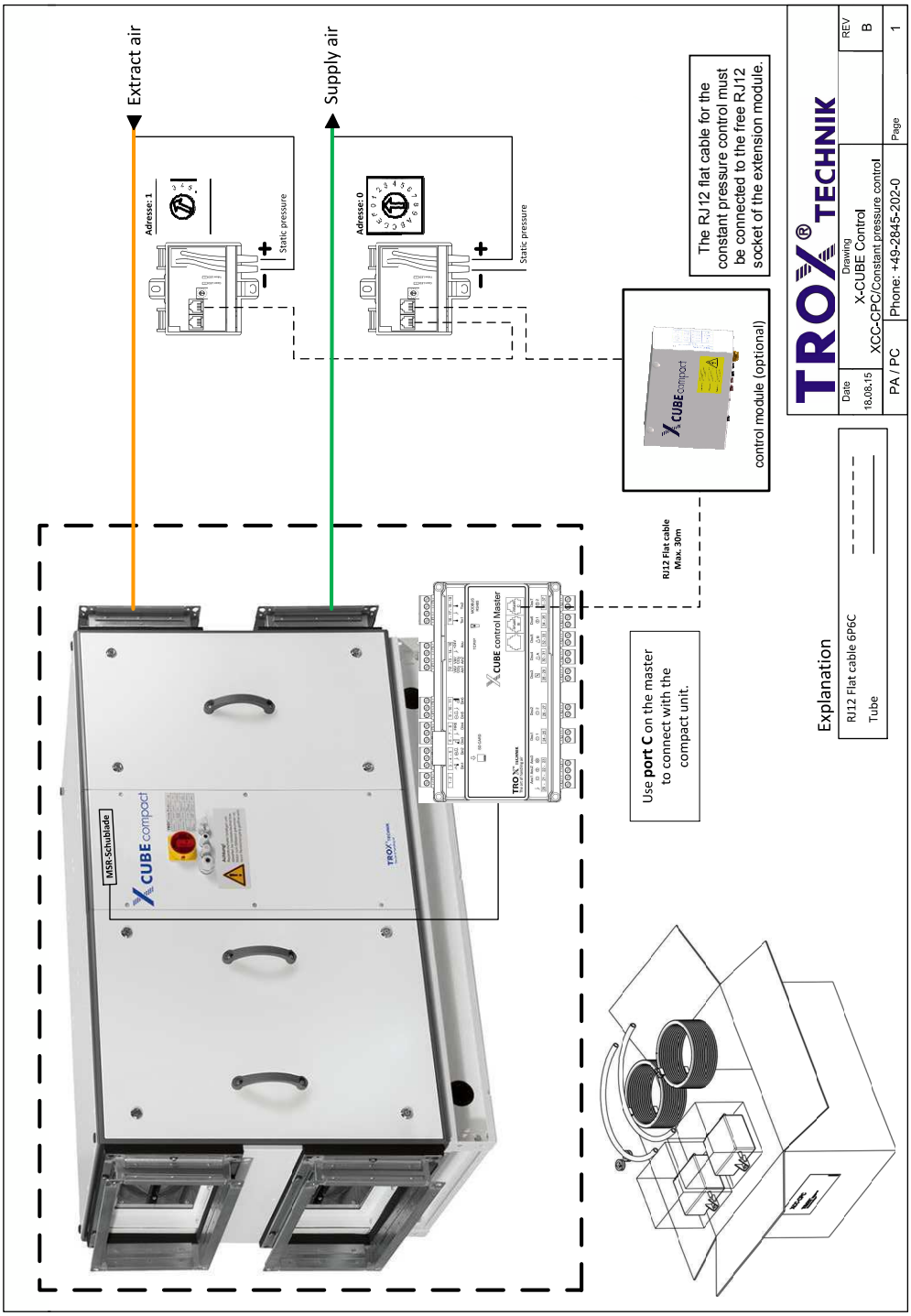

5.9 XCC-LON

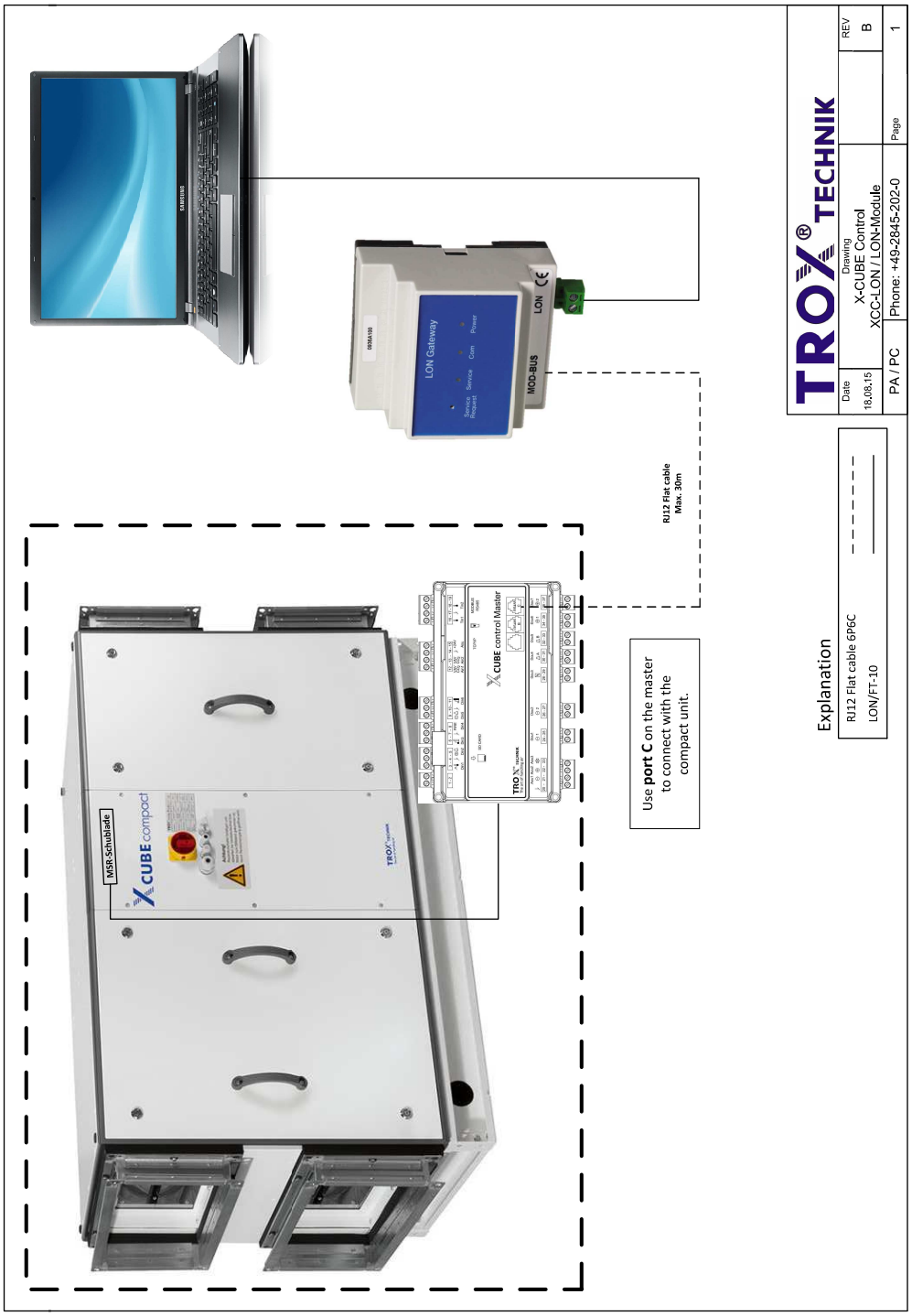
LON Gateway
LON
MOD-BUS
RJ12 Flat cable
Max. 30m
CUBE control Master
MSR-Schublade
CUBE compact
Use port C on the master to connect with the compact unit.
Explanation
RJ12 Flat cable 6P6C
LON/FT-10
TROX TECHNIK
Date
18.08.15
Drawing
X-CUBE Control
XCC-LON / LON-Module
PA / PC
Phone: +49-2845-202-0
REV
B
Page
1

TROX® TECHNIK

The art of handling air

TROX GmbH
Heinrich-Trox-Platz
47504 Neukirchen-Vluyn
Germany

+49 2845 202-0
+49 2845 202-265
E-mail: trox@trox.de
www.troxtechnik.com

© TROX GmbH 2015