Bus interface Modbus RTU

Volume flow controller - static transducer

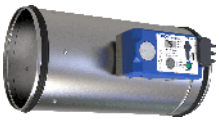

Control component for type TVE

Control components

XS0

Control component with static transducer and Modbus RTU interface

Compact device for use with VAV terminal units TVE

- Controller, static differential pressure transducer and actuator in one casing
- Use in ventilation and air conditioning systems, only with clean and contaminated air
- Simple terminal connection without the use of additional junction boxes
- Volume flow rates q_{vmin} and q_{vmax} are pre-set in the factory and saved in the controller as adjustable parameters
- High data transparency through standardised bus communication Modbus RTU, RS485
- Setpoint value defaults, override controls, parameter adjustment via Modbus register
- Integral display for volume flow rates, operating modes and setting of operating parameters
- Service access for manual adjustment devices and PC configuration software

General information	2	Variants	6
Function	3	Technical data	7
Specification text	4	Product details	15
Order code	5	Nomenclature	24

General information

Application
- All-in-one control devices for VAV terminal units
- Static differential pressure transducer, electronic controller, and actuator are fitted together in one casing
- Static pressure transducer for broader range of applications with clean and contaminated air, e.g. extract air that contains dust and fluff
- Suitable for different control tasks depending on the defaulting of the setpoint value
- Variable volume flow rate control based on setpoint defaults coming from room temperature controller, central BMS, air quality controller or other sources via a communicationinterface or analogue signal
- Override controls for activating q_{vmin}, q_{vmax}, shut-off, OPEN position via Modbus register or switch/ relay are possible (depending on the interface configuration)
- Volume flow rate actual value is available as a network data point or linear voltage signal
- Damper blade position is available as a network data point

Control strategy
- The volume flow controller works independently of the duct pressure
- Differential pressure fluctuations do not result in permanent volume flow rate changes
- To prevent the control from becoming unstable, a dead band is allowed within which the damper blade does not move.
- Flow rate range is set in the controller at the factory (q_{vmin}: minimum volume flow rate, q_{vmax}: maximum volume flow rate)
- Operating parameters are specified via the order code and set in the factory

Operating modes
- Modbus (M): setpoint value default via Modbus register
- Analogue – variable operation (V): setpoint value default via analogue interface, signal voltage range corresponds to q_{vmin} to q_{vmax}
- Analogue – constant value mode (F): no setpoint value signal required, setpoint value corresponds to q_{vmin}

Interface
Communication interface
- Modbus RTU, RS485
- For data points, see Modbus register list

Analogue interface with adjustable signal voltage range
- Analogue signal for volume flow rate setpoint value
- Analogue signal for volume flow rate actual value (factory setting)
- Alternatively: analogue signal for damper blade position (adjustment by others required)

Note
- Interface type according to operating mode pre-set in the factory
- Can be adjusted by others using the communication interface (Modbus register) or display

Signal voltage ranges
When using the analogue interface
- 0 – 10 V DC
- 2 – 10 V DC

Parts and characteristics
- Transducer for static pressure measurements
- Overload protection
- Terminals with cover
- Display and operating elements for simple menu guidance
- Menu guidance for adjusting operating parameters and communication interface
- Service interface

Construction
- TROVM-024T-05I-DS10-MB
- Can only be used for type TVE

Commissioning
- Due to the volume flow rates set in the factory, always ensure that the control units are only installed in the specified locations
- Analogue interface: ready for use after installation and wiring
- Modbus interface: additional commissioning steps required
- Operating parameters can be adjusted by the customer (using the display, adjustment device or Modbus register)
- Zero point correction not required

Useful additions
Adjustment device type GUIV3-M (order code AT-VAV-G3)

Function

VAV terminal units control the volume flow in a closed loop, i.e. measurement - comparison - correction. This is done via a differential pressure sensor. An integral differential pressure transducer converts the effective pressure into a voltage signal. The factory setting is such that 10 V DC correspond to the nominal volume flow rate (q_{vnom}). The volume flow rate setpoint value defaults from a higher-level controller (e.g. room temperature controller, air quality controller, central BMS). Variable volume flow control results in a value between q_{vmin} and q_{vmax}. It is possible to override the room temperature control, e.g. by a complete shut-off of the duct. The controller compares the volume flow rate setpoint value to the actual value and controls the integral actuator accordingly.

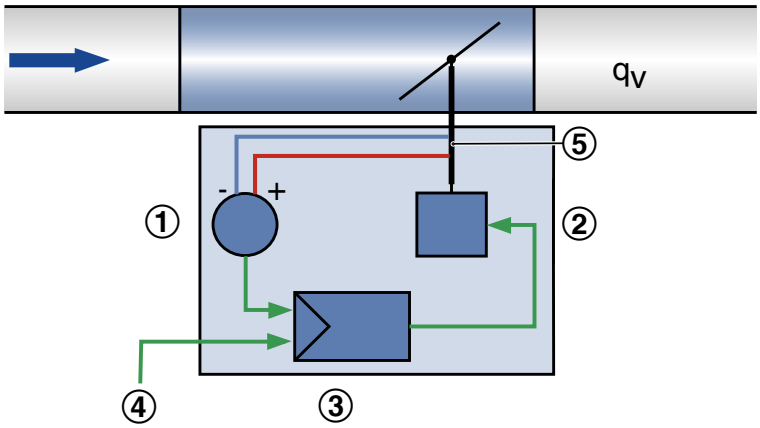

① Differential pressure transducer
② Actuator
③ Volume flow controller
④ Setpoint value via Modbus or analogue signal
⑤ Shaft with effective pressure channel

Specification text

This specification text describes the general properties of the product.

Category
- Compact controller for volume flow rate
- Control according to a constant or variable volume flow rate setpoint
- Electronic controller for applying a reference value and capturing an actual value for integration in the central building management system
- The actual value is based on the nominal volume flow rate such that commissioning and subsequent adjustment are simplified
- Stand-alone operation or integration in central building management system

Application
- Static transducer for contaminated air in ventilation and air conditioning systems
- Modbus commands (Modbus operating mode)
- External switch contacts/wiring (with analogue interface)

Supply voltage
- 24 V AC / DC

Actuator
Integral; slow-running (running time 100 s for 90°)

Installation orientation
- Not critical

Interface/signalling
- Modbus RTU (RS-485) or alternatively analogue signals (0 – 10V or 2 – 10V DC) can be used
- Interface type set in the factory on the basis of the order code

Connection
- Terminals with rubber cap, therefore no additional terminal box required
- Double terminal for supply voltage for easy further wiring of up to 3 controllers

Interface information
- Modbus: including volume flow rate setpoint value and actual value signal, damper blade position, override control
- Alternatively: volume flow rate setpoint value and actual value signal as analogue signal

Special functions
- Clearly visible external indicator light for indicating the functions: Set, not set, and power failure
- Display for actual values, parameter setting and for test functions
- Activation q_{vmin}, q_{vmax}, closed, open by: Modbus (with Modbus control), external switch contacts (with analogue control)

Parameter setting
- Parameters specific to VAV terminal unit are set at the factory
- Operating values: q_{vmin}, q_{vmax} and interface type are set in the factory
- Subsequent adjustment via display and control element directly on the device or with optional tools: adjustment device, PC software (cable connection in each case), in Modbus mode also via Modbus register access

Factory condition
- Electronic controller factory-mounted on the terminal unit
- Factory set parameters
- Functional test under air; certified with sticker

Order code

TVE – D / 200 / D2 / XS0 / V 0 / qvmin – qvmax m³/h
1 2 5 6 7 8 9 10 11

1 Type
TVE VAV terminal unit

2 Acoustic cladding
No entry required: none
D with acoustic cladding

3 Material
Galvanised sheet steel (Standard construction)
P1 Powder-coated RAL 7001, silver grey
A2 Stainless steel construction

5 Nominal size [mm]
100, 125, 160, 200, 250

6 Accessories
No entry required: none
D2 Double lip seal both sides
G2 Matching flanges for both ends

7 Attachments (control component)
XS0 Compact controller with static transducer, Modbus RTU, display

8 Operating mode
F Constant value (a setpoint value)
V variable (setpoint value range)
M Modbus RTU

9 Signal voltage range (only with operating mode F, V)
0 0 – 10 V DC
2 2 – 10 V DC

10 Operating values for factory setting
Volume flow rates in m³/h or l/s
q_{vconst} (only with operating mode F)
q_{vmin} (only with operating mode V, M)
q_{vmax} (only with operating mode V, M)

11 Volume flow unit
m³/h
l/s

Order example: TVE/100/D2/XS0/M/20-350 m³/h

Acoustic cladding	Without
Material	Galvanised sheet steel
Nominal size	100 mm
Accessories	Double lip seal both sides
Attachment	Compact controller Modbus, static transducer
Operating mode	Modbus RTU
Volume flow rate	20 – 350 m³/h

Variants

Compact controller XS0 for TVE

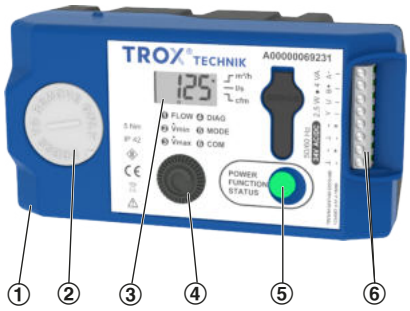

① Compact controller
② Damper blade position indicator and release button
③ Display
④ Rotary selector switch - Selection Options/Setting values
⑤ LED button - Selection Menu entry
⑥ Terminal

Compact controller XS0 for TVE (with attached terminal cover)

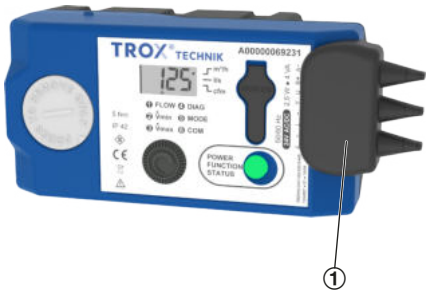

① Terminal cover (part of the supply package)

Technical data

Compact controllers for VAV terminal units

VAV terminal units	Type of installation component	**Part number**
TVE	TROVM-024T-05I-DS10-MB	A00000069231

Compact controller TR0VM-024T-05I-DS10-MB

Supply voltage (AC)	24 V AC ± 20%, 50/60 Hz
Supply voltage (DC)	24 V DC ± 20 %
Power rating (AC)	NW 100 – 200: max. 4 VA NW 250 – 400: max. 7 VA
Power rating (DC)	NW 100 – 200: max. 2.5 W NW 250 – 400: max. 4 W
Power consumption (when running/when idle)	1 W
Run time for 90°	100 s
Setpoint value signal input (analogue optional)	0 – 10 V DC, Ra > 100 kΩ or 2 - 10V DC Ra> 50 kΩ
Actual value signal output	0 – 10 V DC or 2 – 10 V DC; max. 5mA
IEC protection class	III (protective extra-low voltage)
Protection level	IP 42 (with the terminal cover attached)
EC conformity	EMC to 2014/30/EU
Bus connection	Modbus RTU, RS485
Number of nodes	128
Adjustable communication parameters	1200 – 115,200 Bd Start bit: 1 Data bits: 8 Stop bits: 1 or 2 Parity: None, Even, Odd
Setpoint / actual value interface (Modbus)	via Modbus register list
Cable termination	Externally required

Interface configuration of control component

Depending on the setting, the Modbus communication interface or the analogue interface is available for defaulting the volume flow rate setpoint. The so-called interface mode is preset at the factory according to the order code and can be adjusted on-site by setting via the menu navigation or the Modbus registers.

Typical interface configuration

XS0	Setpoint value default setting via:	Actual values via:	Corresponds to order key option	Menu configuration (Mode)
Analogue operation	Analogue 0 – 10 V	Analogue 0 – 10 V	V or F	CA0
Analogue operation	Analogue 2 – 10 V	Analogue 2 – 10 V	V or F	CA2
Modbus operation	Modbus register setpoint	Modbus register actual value or analogue 2 - 10V	M	CB

A special configuration of the Modbus register interface mode enables the configuration of a mixture of Modbus and analogue modes. For more information, see the description of the interface mode in Modbus register 122.

Supplementary use of the Modbus interface in analogue mode

In analogue mode, only the setpoint values defaulting on the analogue input are used. Setpoint default setting via the Modbus interface (register 0) is not possible. Any write attempts will generate an error. Regardless of the selected interface configuration, however, the other Modbus registers can be used. In this way, the volume flow rate actual value and blade position operating values can be read out from a higher-order central BMS with local control via an analogue signal and a connected Modbus, or central override control can also be triggered.

Communication interface Modbus RTU (operating mode M)

Register	Meaning	Access right	Storage
	Volume flow rate setpoint value [%] Reference: Vmin – Vmax (qvmin – qvmax) Resolution: 0 – 10000 Volume flow rate setpoint value: 0.00 – 100.00%	R, W	RAM
1	Activation of an override control; 0 = None; 1 = Open; 2 = Close; 3 = Vmin; 4 = Vmax	R, W	RAM
2	Command triggering 0 = none; 1 = adaptation; 2 = test run; 4 = controller reset	R, W	RAM
4	Current damper blade position [%] Resolution: 0 – 10000 Damper blade position: 0.00 – 100.00%	R	RAM
5	Current damper blade position [°] Reference: without decimal places	R	RAM
6	Current actual volume flow rate [%] Resolution: Vnom Resolution: 0 – 10000 Volume flow rate actual value: 0.00 – 100.00%		RAM
7	Actual volume flow rate in volume flow unit [m³/h], [l/s], [cfm] acc. Register 201	R	RAM
8	Voltage at analogue input Y [mV]	R	RAM
103	Firmware version	R	Flash
104	Status information (Bit = 1 active, bit = 0 inactive) Bit 5 mechanical overload Bit 8 internal activity e.g. test run, adaptation Bit 10 bus timeout monitoring triggered	R	RAM
105	Operating range limitation: Operating parameter Vmin (qvmin) [%] Resolution: Vnom Resolution: 0 – 10000 Vmin: 0.00 – 100.00%	R, W	EEPROM
106	Operating range limitation: Operating parameter Vmax (qvmax) [%] Resolution: Vnom Resolution: 0 – 10000 Vmax: 0.00 – 100.00%	R, W	EEPROM
108	Behaviour in case of bus timeout; 0 = none; 1 = close; 2 = open; 3 = qvmin; 5 = qVmax	R, W	EEPROM
109	Definition of bus timeout [s]	R, W	EEPROM

120	Definition of operating range: operating parameter Vmin (qvmin) in volume flow unit [m³/h], [l/s], [cfm] acc. register 201	R, W	EEPROM
121	Definition of operating range: operating parameters Vmax (qvmax) in volume flow unit [m³/h], [l/s], [cfm] acc. Register 201	R, W	EEPROM
122	Interface definition (Interface mode) For assignment see separate table	R, W	EEPROM
130 *	Modbus address (device address)	R, W	EEPROM
201	Volume flow unit 0 = l/s; 1 = m³/h; 6 = cfm	R, W	EEPROM
231	Setting of mode: Bit 0 defines the characteristic of the analogue interface. Bit 0 = 0 characteristic: 0 – 10 V Bit 0 = 1 characteristic: 2 – 10 V Bit 4 defines the actual value signal as volume flow rate actual value or damper blade position. Bit 4 = 0 volume flow rate actual value Bit 4 = 1 Damper blade position All other bits must not be changed.	R, W	EEPROM
568	Modbus parameter set communication settings: baud rate, parity, stop bits, assignment see separate table	R, W	EEPROM
569	Modbus communication settings: Modbus Response Time = 10 ms + delay; with delay= 3 ms × register value 0 – 255	R, W	EEPROM
572	Setting of switching threshold for override control CLOSE via control signal for signal voltage range 2 – 10 V: Setting range 0.5 V – 1.8 V Default value 0.8V (register value = 20) Resolution: 1 setting unit = 40mV	R, W	EEPROM

* Factory setting: Modbus address 1
R = Register can be read
R,W = Register can be read and written
RAM = Volatile register value
EEPROM = Register value not volatile, but saved permanently (max. 1 million write processes)

Detailed information on register 122 (communication interface setpoint/actual value - Interface Mode)

Register value	Signal input	Feedback signal
	Analogue (0) 2 – 10 V	(0)2 – 10 V
1	Modbus via Register 0	(0)2 – 10 V
2	Modbus via Register 0	Register 10
3	Analogue (0) 2 – 10 V	Register 10

Detailed information on register 568 (Modbus communication parameters)

Register value	Display setting value	Baud rate	Parity	Stop bits
	1	1200	None	2
1	2	1200	Even	1
2	3	1200	Odd	1
3	4	2400	None	2
4	5	2400	Even	1
5	6	2400	Odd	1
6	7	4800	None	2
7	8	4800	Even	1
8	9	4800	Odd	1
9	10	9600	None	2
10	11	9600	Even	1
11	12	9600	Odd	1
12	13	19200	None	2
13	14	19200	Even	1
14	15	19200	Odd	1
15 **	**16**	**38400**	**None**	**2**
16	17	38400	Even	1
17	18	38400	Odd	1
18	19	1200	None	1
19	20	2400	None	1
20	21	4800	None	1
21	22	9600	None	1
22	23	19200	None	1
23	24	38400	None	1
24	25	76800	None	1
25	26	115200	None	1
26	27	76800	None	2
27	28	76800	Even	1
28	29	76800	Odd	1
29	30	115200	None	2
30	31	115200	Even	1
31	32	115200	Odd	1

** Factory setting: Modbus communication parameters

Range of display functions

Display functions

- Volume flow rate actual value (unit optionally m³/h, l/s, cfm)
- 3-character display with positional notation
- Status and error display for various operating states, including display of activated override control, display of diagnostic function

Parameter setting

- Adjustment option for the unit of the volume flow rate display m³/h, l/s, cfm
- Adjustment option for the operating range q_{vmin}, q_{vmax}
- Selection of the interface configuration Modbus or analogue including signal voltage range 0 – 10 V or 2 – 10 V DC
- Adjustment option for Modbus communication settings (address, baud rate, stop bits, parity)

Diagnosis

- Activation of a test run
- Activation of override controls Open, Closed, q_{vmin}, q_{vmax}, motor stop (note prioritisation)
- Display of the voltage value on the analogue input

Commissioning

Note on static transducer type used

- Installation orientation not critical
- Zero point correction not required

After installation, wiring and connection of the supply voltage

- When using the Modbus interface: set the Modbus communication parameters via the integral menu, the air terminal unit is then ready
- Setpoint value default setting via Modbus register
- When using the analogue interface: air terminal unit is immediately ready for use
- Comply with volume flow rate control range from 4 – 100 % of $q_{vnenn;}$ do not set a volume flow rate which is below the minimum flow rate of the control unit
- Only briefly remove the protective cap for the terminals during wiring

Use and description of the display

Pressing the LED push button (< 3 s) selects the next menu item ① - ⑥. The selected menu item can be changed by pressing the LED push button for more than 3 s. Changing is done with the rotary selector switch. Pressing the LED push button again (< 3 s) confirms the selected value. If no entry is made for >= 60 s, the system returns to menu item 1.

Cut-out for control elements

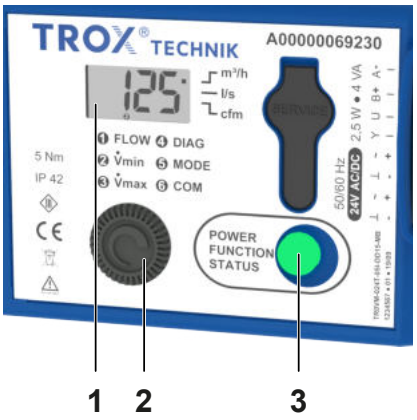

1: Display
2: Rotary selector switch
3: LED push button

Table 1: Description of the menu items

① Flow	Display of actual values or operating states. Setting the volume flow rate unit m³/h, l/s, cfm.
② Vmin	Setting qvmin
③ Vmax	Setting qvmax
④ DIAG	Displays the control signal and feedback signal alternately in [V], Activation of override controls for test and diagnostic purposes: tst = test run oP = damper OPEN cL = damper CLOSE Lo = q_{vmin} Hi = q_{vmax} St = Motor stop oFF = Override control Off 000 = Display firmware version
⑤ MODE	Selection of the operating mode: CA0 = Setpoint value setting and actual value return via analogue interface (0 – 10 V) CA2 = Setpoint value setting and actual value return via analogue interface (2 – 10 V) CB2 = Setpoint value setting and actual value return via Modbus - Optional actual value return via (2 – 10 V)
⑥ COM	Setting the modbus address: 1 - 247 and the baud rate, parity, stop bits: 1 (b1) - 32 (b32)

Description of status LEDs and error messages

LED flashing signal	Status	Display
	No supply voltage connected.	
	Inform TROX service technicians	E C
	Actuator overload detected (block)	bLc
	Synchronisation after Power Up	rEF
	Test mode activated	tSt
	Overpressure sensor (overpressure)	
	Setpoint value or override control position not yet reached (display changes between e.g. Hi = High and actual value)	Hi
	Override control position reached (display changes between e.g. Hi = High and actual value)	Hi
	Normal operation with the setpoint being maintained. Signalled as long as the actuator does not rotate to readjust the setpoint value.	S80

The flashing signal appears every 2 seconds. 1 = LED is illuminated, 0 = LED is not illuminated

Product details

Modbus operation (operating mode M in the order code)

A smooth exchange of data in the Modbus RTU network (network by others) requires that the communication parameters and the user address for the Modbus interface are set.

The interface offers standardised Modbus register access to the available data points by means of the ReadHoldingRegister (3) and WriteSingleRegister (6) functions.

Setpoint value default setting

- With operating mode M, the setpoint value defaults as a percentage [%] in Modbus register 0.
- The percentage value refers to the volume flow rate range qvmin – qvmax
- Volume flow rate range qvmin – qvmax is set in the factory according to the order code
- qvmin or qvmax can be adjusted at a later stage using the setup menu on the display or with an adjustment device or the Modbus interface

Actual value as feedback for monitoring or tracking control

- In Modbus register 7, the current actual volume flow rate can be called up in the set volume flow rate unit (register 201)
- In addition to the volume flow rate actual value, further information on other Modbus registers can be read out;
- For overview, see register list
- For diagnostic purposes, the volume flow rate actual value can be tapped at terminal U in Modbus mode
- The volume flow rate range 0 – qvnom always corresponds to the signal voltage range 2 – 10 V DC

Override control

For special operating situations, the volume flow controller can be put in a special operating mode (override control). The following modes are available: control based on qvmin, control based on qvmax, damper blade in OPEN position (OPEN) or damper blade closed (CLOSED).

Override control via the Modbus

This is set via the Modbus register 1.

Override control via bus timeout monitoring

If the Modbus communication fails for a specified period, a predefined operating state (qvmin, qvmax, OPEN or CLOSED) can be activated.

- The override control to be activated upon bus failure is specified via register 108
- The time period after which override control is activated upon bus failure is specified via register 109
- Each Modbus communication resets the timeout of the bus timeout monitoring

Override controls for diagnosis

Activation of the diagnostic menu on the display of the controller or via the service tools (adjustment device, PC software).

Prioritisation of various setting options

Settings for override controls via service tools are prioritised over Modbus settings.

- Highest priority: defaults coming from a service tool (service connector), e.g. adjustment device or PC software, for test purposes
- Lowest priority: defaults coming from Modbus 1 or the diagnosis menu on the controller

Analogue mode 0 – 10 V DC or 2 – 10 V DC (order code, operating mode V, F)

The analogue interface can be adjusted for the signal voltage range 0 – 10 V DC or 2 – 10V DC.
The assignment of the volume flow rate setpoint value or actual value for voltage signals is shown in the characteristic curves.

- The set signal voltage range applies to both setpoint value and actual value signals
- The signal voltage range is set in the factory according to the order code
- The signal voltage range can be adjusted by others in the setup menu on the display or using the adjustment device

Setpoint value default setting

- In operating mode V (variable mode), the setpoint value is only specified with an analogue signal on terminal Y
  - Setpoint value settings via the Modbus register 0 are rejected
- The selected signal voltage range 0 – 10 V or 2 – 10 V DC is mapped to the volume flow rate range qvmin – qvmax
- Volume flow rate range qvmin – qvmax is set in the factory according to the order code
- qvmin or qvmax can be adjusted at a later stage using the setup menu on the display or with an adjustment device

In operating mode F (constant value mode), an analogue signal at terminal Y is not required

- The constant volume flow rate value set by qvmin is regulated
- Volume flow rate qvmin is set in the factory according to the order code
- qvmin can be adjusted at a later stage using the setup menu on the display or with an adjustment device

Actual value as feedback for monitoring or tracking control

The actual volume flow rate measured by the controller can be captured as a voltage signal at terminal U
The selected signal voltage range 0 – 10 V DC or 2 – 10 V DC is mapped to the volume flow rate range 0 – qvnom
In analogue mode (operating mode V, F), there is also the option of querying operating data using the Modbus interface

Override control

For special operating situations, the volume flow controller can be put in a special operating mode (override control). The following modes are available: control based on qvmin, control based on qvmax, damper blade in OPEN position (OPEN) or damper blade closed (CLOSED).

Override controls via signal input Y

Thanks to appropriate wiring on the signal input Y, the override controls can be activated according to the connection diagrams via wiring with external switch contacts / relays (see wiring examples). OPEN and CLOSED are only available if the controller is supplied with alternating current (AC).

Override control CLOSE using signal input Y

- With signal voltage range 0 – 10V DC: CLOSED is activated when qvmin=0 is set and the control signal is Y < 0.3 V DC
- For signal voltage range 2 – 10 V DC: CLOSED is activated if control signal Y < 0.8 V (*1) DC

(*1) 0.8 V = factory setting

Override controls in analogue mode via Modbus interface

If the Modbus interface is additionally connected in analogue mode, an override control can also be specified via Modbus register 1.

Override control for diagnosis

Activation via the diagnostic menu in the display of the controller or the service tools (adjustment device, PC software).

Prioritisation of various setting options

Various override control options are prioritised as follows by the controller:

- Highest priority: defaults coming from a service tool (service connector), e.g. adjustment device or PC software, for test purposes
- Medium priority: settings via Modbus register 1 or the diagnostic menu on the controller
- Lowest priority: settings via wiring on the Y signal input of the controller

Characteristic of the setpoint value signal

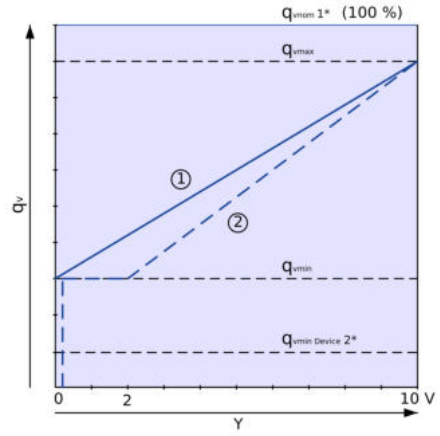

① Signal voltage range 0 – 10 V
② Signal voltage range 2 – 10 V
1* = q_{vnom} Nominal volume flow rate
2* = $q_{vmin\ Device}$ Minimum adjustable volume flow rate

Characteristic of the actual value signal

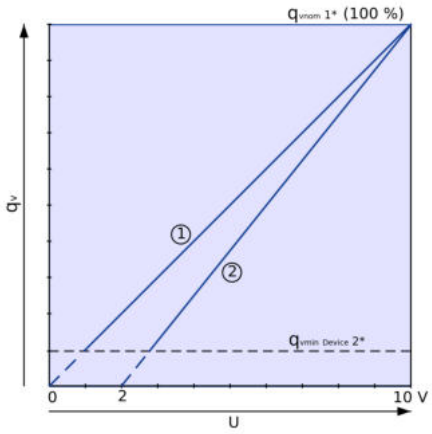

① Signal voltage range 0 – 10 V
② Signal voltage range 2 – 10 V
1* = q_{vnom} Nominal volume flow rate
2* = $q_{vmin\ Device}$ Minimum adjustable volume flow rate

Calculation of nominal volume flow at 0 – 10 V

$$q_{vset} = \frac{Y}{10\ V} \times (q_{vmax} - q_{vmin}) + q_{vmin}$$

Calculation of volume flow rate actual value 0 – 10 V

$$q_{vact} = \frac{U}{10\ V} \times q_{vnom}$$

Calculation of nominal volume flow at 2 – 10 V

$$q_{vset} = \frac{Y - 2\ V}{(10\ V - 2\ V)} \times (q_{vmax} - q_{vmin}) + q_{vmin}$$

Calculation of volume flow rate actual value at 2 – 10 V

$$q_{vact} = \frac{U - 2}{10\ V - 2\ V} \times q_{vnom}$$

Terminal connections with analogue operation 0 – 10 V or 2 – 10 V

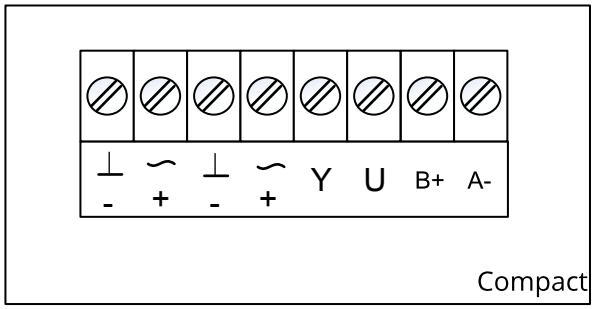

⊥, – = Ground, neutral
~, += Supply voltage 24 V
Y = Setpoint value signal 0 – 10 V DC or 2 – 10 V DC and override control
U = Actual value signal 0 – 10 V DC or 2 – 10 V DC
B+ = Modbus RTU (no setpoint value setting via Modbus)
A- = Modbus RTU (no setpoint value setting via Modbus)

Modbus RTU connections, one voltage source

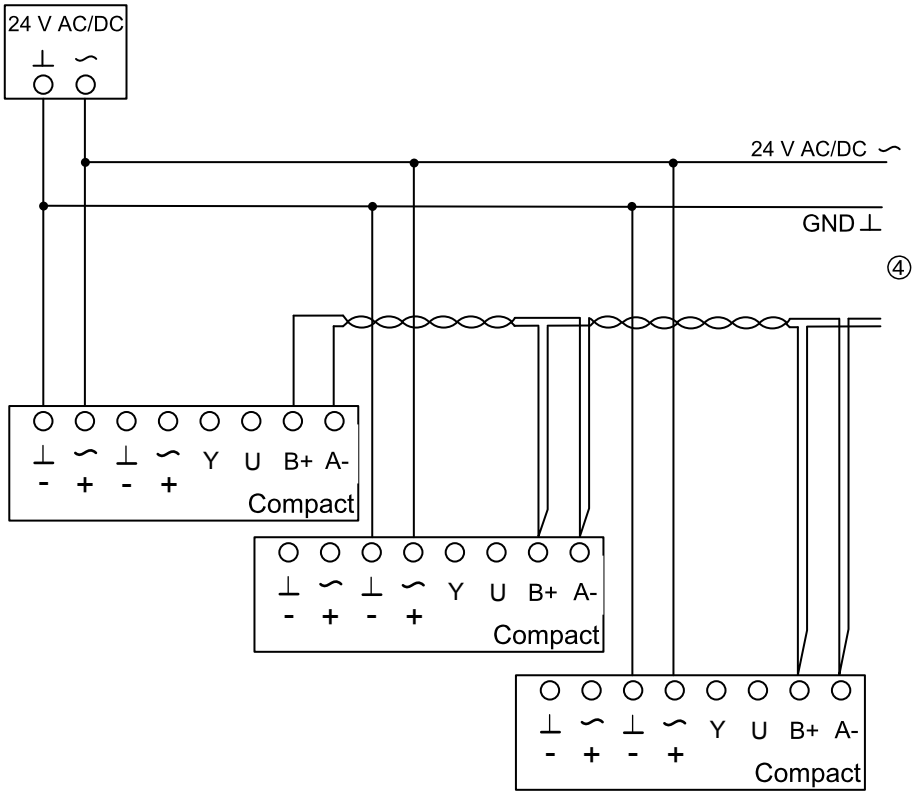

⊥, – = Ground, neutral
~, += Supply voltage 24 V
B+ = Modbus RTU
A- = Modbus RTU
④ Other network devices

Note:

- Electrical connection only with safety transformer
- Modbus wiring only according to the relevant RS485 guidelines
- Supply voltage and communication **not** galvanically isolated. All electric devices have to be connected to the same GND signal.

Modbus RTU connections, several voltage sources

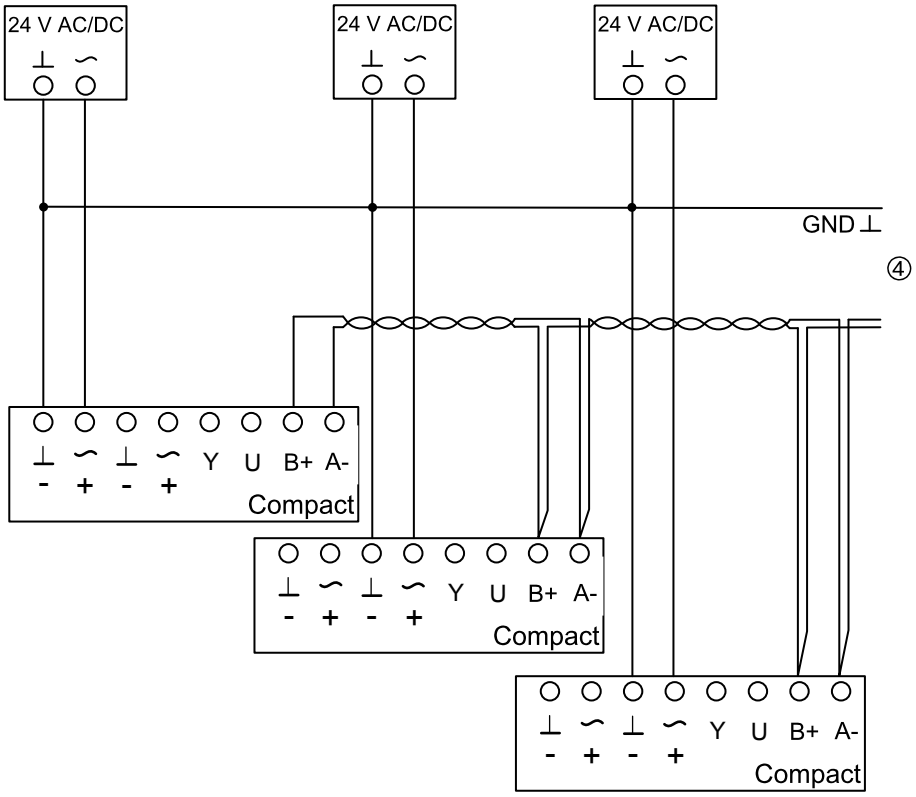

⊥, – = Ground, neutral
~, += Supply voltage 24 V
B+ = Modbus RTU
A- = Modbus RTU
④ Other network devices

Note:

- Electrical connection only with safety transformer
- Modbus wiring only according to the relevant RS485 guidelines
- Supply voltage and communication **not** galvanically isolated. All electric devices have to be connected to the same GND signal.
- If several voltage sources are being used, the GND of all the sources have to be connected.

Terminal connections for Modbus operation

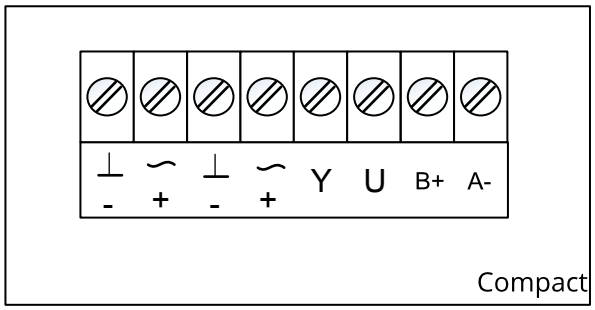

⊥, – = Ground, neutral
~, += Supply voltage 24 V
Y = Analogue input
U = Actual value signal 2 – 10 V DC
B+ = Modbus RTU
A- = Modbus RTU

XM0, Control input signal analogue and override control, voltage signal 2 – 10 V DC

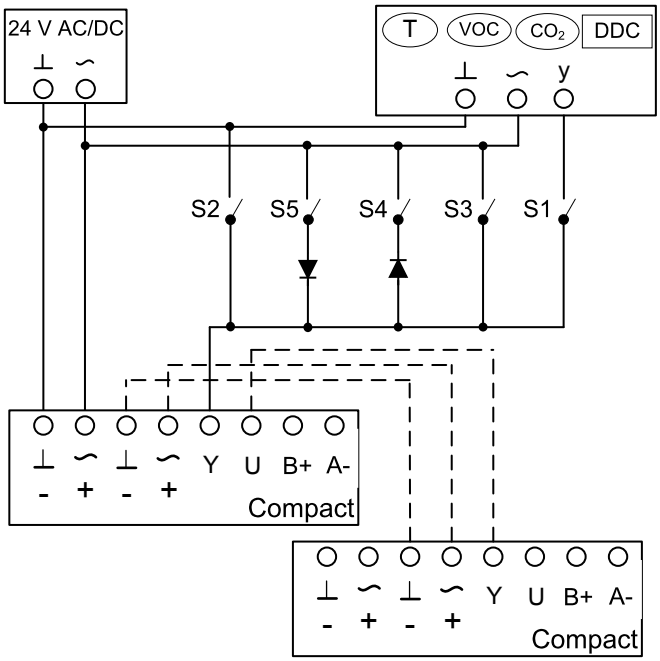

When combining several override controls, the switches must be interlocked to prevent short-circuits. Diode: e.g. 1N 4007

Switch functions
All OPEN: minimum volume flow rate q_{vmin}
S1 = Room temperature control
S2 = Damper blade CLOSED
S3 = Maxium volume flow rate q_{vmax}
S4 = Damper blade CLOSED (only with supply voltage 24 V AC)
S5 = Damper blade OPEN (only with supply voltage 24 V AC)
T, VOC, CO2, DDC = Setpoint value default setting

XM0, Control input signal analogue and override control, voltage signal 0 – 10 V DC

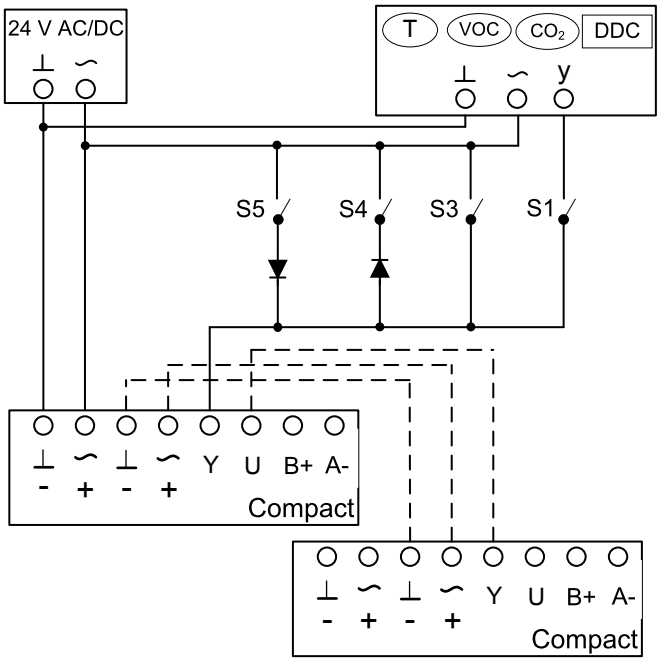

When combining several override controls, the switches must be interlocked to prevent short-circuits. Diode: e.g. 1N 4007

Switch functions
All OPEN: minimum volume flow rate q_{vmin}
S1 = Room temperature control
S3 = Maximum volume flow rate q_{vmax}
S4 = Damper blade CLOSED (only with supply voltage 24 V AC)
S5 = Damper blade OPEN (only with supply voltage 24 V AC)
T, VOC, CO2, DDC = Setpoint value default setting

Nomenclature

q_{vNom} [m³/h]; [l/s]
Nominal flow rate (100 %): The value depends on product type, nominal size and control component (attachment). Values are published on the internet and in technical leaflets and stored in the Easy Product Finder design program. Reference value for calculating percentages (e.g. q_{vmax}). Upper limit of the setting range and maximum volume flow rate setpoint value for the VAV terminal unit.

$q_{vmin\ Unit}$ [m³/h]; [l/s]
Technically possible minimum volume flow rate: The value depends on product type, nominal size and control component (attachment). Values are stored in the Easy Product Finder design program. Lower limit of the setting range and minimum volume flow rate setpoint value for the VAV terminal unit. Setpoint values below $q_{vmin\ unit}$ (if q_{vmin} equals zero) may result in unstable control or shut-off.

q_{vmax} [m³/h]; [l/s]
Upper limit of the operating range for the VAV terminal unit that can be set by customers: q_{vmax} can be set to less than or equal to q_{vnom} For analogue signalling to volume flow controllers (typically used), the maximum value of the setpoint signal (10 V) is assigned the set maximum value (q_{vmax}) (see characteristic).

q_{vmin} [m³/h]; [l/s]
Lower limit of the operating range for the VAV terminal unit that can be set by customers: q_{vmin} should be set to less than or equal to q_{vmax} . Do not set q_{vmin} to less than $q_{vmin\ unit}$ as the control may become unstable or the damper blade may close. q_{vmin} may equal zero. In case of analogue signalling to volume flow controllers (which are typically used), the set minimum value (q_{vmin}) is allocated to the minimum setpoint signal (0 or 2 V) (see characteristic).

q_v [m³/h]; [l/s]
Volume flow rate

VAV terminal unit
Consists of a basic unit with an attached control component.

Basic unit
Unit for controlling a volume flow without an attached control component. The main components include the casing with sensor(s) to measure the effective pressure and the damper blade to restrict the volume flow. The basic unit is also referred to as a VAV terminal unit. Important distinguishing features: Geometry or unit shape, material and types of connection, acoustic characteristics (e.g. acoustic cladding or integral sound attenuator), volume flow rate range.

Control component
Electronic unit(s) mounted on the basic unit to control the volume flow rate or the duct pressure or the room pressure by adjusting the damper blade position. The electronic unit consists basically of a controller with effective pressure transducer (integral or external) and an integral actuator (Easy and Compact controllers) or external actuator (Universal or LABCONTROL controllers). Important distinguishing features: Transducer: dynamic transducer for clean air or static transducer for contaminated air. Actuator: slow-running actuator as standard, spring return actuator for safe position, or fast-running actuator. Interface: analogue interface or digital bus interface for the capturing of signals and data.